PDN - CHAPTER 3

MULTIMODAL

DESIGN

CHAPTER 3 MULTIMODAL DESIGN

Table of Contents

INTRODUCTION 1
SECTION 1 – MULTIMODAL DESIGN OVERVIEW 3
3-100.00 GENERAL 3
3-101.00 APPLICABILITY 3
3-102.00 RESPONSIBLE AGENCY 4
SECTION 2 – MULTIMODAL ROADWAY DESIGN PROCESS 5
3-200.00 GENERAL 5
3-201.00 LAND USE CONTEXT CONSIDERATIONS 5
3-202.00 DESIGN FLEXIBILITY 6
3-203.00 BALANCING MULTIMODAL SAFETY, LEVEL AND QUALITY OF SERVICE . 6
3-204.00 ALLOCATING RIGHT-OF-WAY FOR MULTIMODAL FACILITIES 7
3-204.01 SEPARATE ACCOMMODATION FOR ALL USERS 7
3-204.02 PARTIAL SHARING FOR BICYCLES AND MOTOR VEHICLES 8
3-204.03 SHARED BICYCLE/MOTOR VEHICLE ACCOMMODATION 9
3-204.04 SHARED BICYCLE/ ACCOMMODATION 10
3-204.05 SHARED ACCOMODATION ALL USERS 11
3-205.00 FACILITIES NOT GENERALLY WARRANTING MULTIMODAL ACCOMMODATIONS 12
SECTION 3 – TDOT ACCESSIBILITY GUIDANCE 13
3-300.00 GENERAL 13
3-301.00 ACCESSIBILITY REQUIREMENTS BY PROJECT TYPE 13
3-301.01 NEW CONSTRUCTION PROJECTS 14
3-301.02 ALTERATIONs 14
3-301.03 MAINTENANCE PROJECTS 17
SECTION 4 – ACCESSIBLE PEDESTRIAN TRAVEL 18
3-400.00 GENERAL 18
3-401.00 PROVISION OF PEDESTRIAN FACILITIES 18
3-402.00 PEDESTRIAN ROUTE SELECTION 19
3-403.00 SIDEWALK DESIGN ON CURBED ROADWAYS 21
3-404.00 SIDEWALK DESIGN ON NON-CURBED ROADWAYS 22

3-405.00 PEDESTRIAN CROSSINGS AND CROSSWALK MARKINGS AT INTERSECTIONS 23
3-405.10 UNCONTROLLED PEDESTRIAN CROSSINGS 26
3-405.15 CLOSING CROSSWALKS....28
3-405.20 CROSSWALK MARKING AND TYPES 28
3-405.30 PEDESTRIAN CROSSING SAFETY CONSIDERATIONS....29
3-405.40 CROSSWALK MARKING ARCHITECTURAL FEATURES 29
3-405.50 UNMARKED CROSSWALKS 29
3-405.60 ACCESSIBLE CROSSWALK DESIGN ELEMENTS 29
3-406.00 CURB RAMPS AND DETECTABLE WARNING SURFACES....30
3-407.00 MIDBLOCK PEDESTRIAN CROSSINGS....31
3-408.00 CURB EXTENSIONS/BULB-OUTS 35
3-409.00 PEDESTRIAN, BICYCLE, CONSIDERATIONS FOR ROUNDABOUTS....35
3-409.01 CROSSWALK FACILITIES....36
3-409.02 ACCESSIBLE PEDESTRIAN CROSSINGS 37
3-409.03 BICYCLE FACILITIES 40
3-410.00 PEDESTRIAN ACCOMMODATION AT SIGNALIZED INTERSECTIONS 41
3-411.00 PEDESTRIAN TREATMENTS AT RAILROAD CROSSINGS....43
3-412.00 BARRIERS AND RAILINGS FOR PEDESTRIAN FACILITIES 43
3-413.00 SIGHT DISTANCE TRIANGLES 43
3-414.00 INTERCHANGE CONSIDERATIONS....44
3-415.00 BRIDGE CONSIDERATIONS....46
3-416.00 ILLUMINATION AND SIGNING....47
3-417.00 WORK ZONE PEDESTRIAN ACCOMMODATION....47
3-418.00 PEDESTRIAN ACCESS TO TRANSIT STOPS 48
SECTION 5 – BICYCLE FACILITIES 49
3-500.00 GENERAL 49
3-501.00 TYPES OF BICYCLE FACILITIES....49
3-501.01 ON-STREET SHARED-USE LANES 49
3-501.02 BICYCLES ON SHOULDERS....50
3-501.03 STRIPED ON-STREET BICYCLE LANES 50
3-501.04 BUFFERED ON-STREET BICYCLE LANES 52
3-501.05 SEPARATED BICYCLE LANES / CYCLE TRACKS 53

3-501.06 SHARED-USE PATH / SIDEPATH 53
3-502.00 BICYCLE FACILITY SELECTION 54
3-503.00 BICYCLES AT INTERSECTIONS 54
3-504.00 APPROACH THROUGH LANES 54
3-505.00 BICYCLE BOXES 55
3-506.00 DRAINAGE GRATES / INLETS / JUNCTIONS 56
3-507.00 PAVEMENT MARKINGS 56
3-508.00 RAILROAD CROSSINGS 56
3-509.00 BRIDGE CONSIDERATIONS 58
3-510.00 BARRIERS AND RAILINGS 58
3-511.00 SIGHT DISTANCE TRIANGLES 59
3-512.00 INTERCHANGE CONSIDERATIONS 59
SECTION 6 – SHARED-USE PATHS 61
3-600.00 GENERAL 61
3-601.00 DESIGN SPEED AND CAPACITY 61
3-602.00 GRADES 61
3-603.00 HORIZONTAL AND VERTICAL CURVES 62
3-604.00 PATH WIDTHS 62
3-605.00 ADA REQUIREMENTS 62
3-606.00 OFFSETS FROM ROADWAY 63
3-607.00 PATH CLEARANCES 63
3-608.00 CROSS SLOPES 63
3-609.00 DRAINAGE 64
3-610.00 STRUCTURES ON PATHS 64
3-611.00 INTERSECTIONS AND CROSSINGS DESIGN 64
3-612.00 SIGHT DISTANCE TRIANGLES 64
3-613.00 BARRIERS AND RAILINGS 64
3-614.00 SIGNING AND MARKING 65
SECTION 7 – TRANSIT FACILITIES 66
3-700.00 GENERAL 66
3-701.00 ACCOMMODATING TRANSIT USERS 66
3-702.00 BUS STOP ACCESSIBILITY 66

3-703.00 CURB EXTENSIONS / BUS BULBS 67
3-704.00 BUS STOPS AND TURNOUTS 67
3-705.00 BUS STOP PLACEMENT GUIDANCE 68
3-705.01 FAR-SIDE BUS STOPS 70
3-705.02 NEAR-SIDE BUS STOPS 70
3-705.03 MIDBLOCK BUS STOPS 71
3-706.00 BUS TURNOUTS 71
SECTION 8 – VEHICLE FACILITIES SUPPORTING MULTIMODAL ACCOMMODATION 73
3-800.00 GENERAL 73
3-801.00 VEHICLE TRAVEL LANE AND SHOULDER WIDTHS 73
3-802.00 DESIGN VEHICLES AND CONTROL VEHICLES 74
3-803.00 DESIGN SPEED CONSIDERATIONS IN MULTIMODAL DESIGN 75
3-804.00 ON-STREET PARKING CONSIDERATIONS 76
3-805.00 INTERSECTION CURB RADIUS CONSIDERATIONS 76
3-806.00 CROSSWALKS AT MIDBLOCK LOCATIONS 79
3-807.00 ROAD RECONFIGURATION AND ROAD DIETS 79
SECTION 9 – ADDITIONAL CONSIDERATIONS 80
3-900.00 GENERAL 80
3-901.00 SAFETY CONSIDERATIONS FOR ALL USERS 80
3-902.00 SPEED CONSIDERATIONS IN MULTIMODAL DESIGN 80
3-903.00 PEDESTRIAN SIGNAL CONSIDERATIONS IN MULTIMODAL DESIGN 81
3-904.00 MULTIMODAL ACCOMMODATIONS IN RESURFACING PROJECTS 81
3-905.00 MAINTENANCE CONSIDERATIONS 82
3-906.00 PAVEMENT CONSIDERATIONS IN MULTIMODAL DESIGN 82
3-907.00 WORK ZONE MULTIMODAL MOBILITY REQUIREMENTS 83
3-908.00 DESIGN WAIVER FORM 83

INTRODUCTION

ROADWAY DESIGN GUIDELINES AND STANDARD DRAWINGS

Roadway Design Guidelines (RDG) and Standard Drawings have been created to ensure that there is consistency in TDOT projects across the state. The Roadway Design Guidelines and Standard Drawings indicate the current recognized design standards for new construction or reconstruction of existing highways and shall be utilized while giving due regard to topography, natural conditions, availability of road material, and prevailing traffic conditions.

Throughout these guidelines you will see the following terms used. To clarify the meanings intended in this guide, the following definitions apply:

- **Design Lead / Technical Lead** – Preconstruction Discipline Designer, or Consultant Discipline Designer
- **Project Manager** – assigned from Project Management division to lead Project team in delivery of project within defined scope, schedule, and budget.
- **Project Team** – Preconstruction Team consisting of a Discipline Manager, members of Roadway, Structure, Survey, Environmental, ROW, and Utilities (either TDOT staff or consulting staff), overseen by a Project Manager.
- **Concept Report** – Report developed by the Strategic Transportation Investments Division during Stage 0 of a project.

All forms mentioned throughout this chapter can be found on the *Roadway Design -TDOT Documents* webpage.

3 Phases of Project Development

1. Preliminary
2. Right-of-Way
3. Construction

Stages of Project Delivery Network

0. Planning
1. Context/Scoping
2. Footprint Established
3. Plan-in-Hand
4. PS&E

This page is left blank intentionally.

SECTION 1 – MULTIMODAL DESIGN OVERVIEW

3-100.00 GENERAL

It is TDOT's policy to create and implement access and mobility for users of all ages and abilities through the planning, design, construction, maintenance, and operation of new construction, reconstruction, and retrofit transportation facilities that are federally or state funded. Users include, but are not limited to, motorists, bicyclists, pedestrians, transit-riders, and freight carriers. Pedestrian facilities typically include sidewalks, shared-use paths, and walkways as well as all other features of the pedestrian route such as crosswalks, curb ramps, pedestrian signals and pushbuttons. Pedestrian facilities can either be immediately adjacent to streets and highways or separated from them by a buffer.

The intent of TDOT's policy is to promote the inclusion of multimodal accommodations in all transportation planning and project development activities at the local, regional, and statewide levels, and to develop a comprehensive, integrated, and connected multimodal transportation network. These guidelines have been developed to assist TDOT, local agencies, consultants, and others in providing multimodal facility design that fulfills the intent of this policy. TDOT's *Multimodal Project Scoping Manual* is an additional multimodal design resource.

3-101.00 APPLICABILITY

It is TDOT's policy to provide appropriate multimodal facilities along and across sections of State Routes as all travel modes are considered an integral part of the state's transportation system. Federal Highway Administration (FHWA) and TDOT policy is that bicycle, pedestrian, and transit facilities be given full consideration in the planning and design of any transportation facility except where those modes may be prohibited or unlikely to be provided in the future. All pedestrian facilities shall meet all ADA and TDOT standards.

The design guidelines contained in this chapter apply to the planning and design of all project types, including the following designations:

- projects on new alignment
- reconstruction projects
- resurfacing projects

Both TDOT and Local Government projects fully or partially funded with state or federal funds or projects within TDOT's transportation network or right-of-way are required to adhere to these *Design Guidelines*. Local agencies managing projects that include state or federal funding must also comply with this chapter pursuant to TDOT's *Local Government Guidelines for the Management of Federal and State Funded Transportation Projects*.

3-102.00 RESPONSIBLE AGENCY

Proposed projects in public rights-of-way must address ADA compliance as described in this chapter and elsewhere in TDOT standards. On Local Program projects, the public agency that is sponsoring the project is responsible for ensuring that Americans with Disabilities Act (ADA) and TDOT standards are compliant and fully addressed.

SECTION 2 – MULTIMODAL ROADWAY DESIGN PROCESS

3-200.00 GENERAL

Designing a multimodal roadway is not a one-size-fits-all approach. It requires an analysis of various site conditions to determine appropriate treatments and solutions. Factors that should be considered include the physical and operating characteristics of the street, general land use type (urban, suburban, rural), adjacent and surrounding land use context (retail, office, residential, industrial, etc.), community goals, crash history, and expected pedestrian volume, bicycle volume, transit use, and current and future motor vehicle demand.

3-201.00 LAND USE CONTEXT CONSIDERATIONS

The appropriate design and operation of a street must consider the existing and future surrounding land use. The design professional should evaluate conditions beyond simply urban and rural conditions and, where available, use local agency land use, transportation, and community plans to understand potential future needs and project demand for all modes. Concerning land use context, the design professional should take these steps early in the Transportation Management Plan if this information is not available from previous project planning efforts:

- Consider both the existing conditions and the plans for the future by reviewing the area's planning documents and zoning
- Identify current levels or project future travel demand for all modes within the project limits. Recognize that streets often last longer than adjacent development
- Acknowledge when a project travels through multiple context zones that the street's design characteristics, including its typical section, may need to be varied accordingly (i.e., a corridor that transitions from suburban to urban, or residential to retail)
- Understand that a contextual corridor often extends beyond an individual project's limits, and therefore a project's study corridor may need to extend beyond its limits of design
- Identify current levels of pedestrian, bicycle, and transit activity or estimate future levels based on the type, mix, and proximity of planned future land uses

3-202.00 DESIGN FLEXIBILITY

Designing roadways that effectively serve all modes can be a challenging process, especially along major state facilities in urban, suburban, and small-town areas. Using design elements, criteria, and dimensions typically used for motor vehicle-focused facilities may not be appropriate or even possible in these contexts that are often in constrained right-of-way. Applying flexibility in the geometric design process requires knowledge of roadway design standards and guidelines, a recognition of the range of options available, and an understanding of how deviating from these may impact safety and mobility for each mode being served. A flexible approach uses existing tools in creative and varied ways to solve design challenges. It requires a holistic understanding of variables, thresholds, and available alternatives to achieve multiple objectives.

TDOT's *Roadway Design Guidelines* support flexible design and recognize that this flexibility is often necessary to apply in multimodal project design. TDOT's design guidance is primarily based on policy and guidance in AASHTO's *A Policy on Geometric Design of Highways and Streets* (Green Book) and the supplemental guides for pedestrian, bicycle, and transit facility design. The Green Book emphasizes the need for a holistic design approach and the use of engineering judgment and highlights how good street design involves balancing preservation of scenic, aesthetic, historic, cultural, and environmental resources while maintaining safety and mobility using flexibility in the application of sound principles by the knowledgeable design professional.

3-203.00 BALANCING MULTIMODAL SAFETY, LEVEL AND QUALITY OF SERVICE

There is no single set of design criteria or templates that can be used to create a multimodal street. The appropriate design accommodation for each mode of travel is dependent on many factors as discussed earlier in this chapter. The goal is to understand and then balance the needs of each mode with design solutions that are appropriate throughout the project's design period.

For larger, complex projects, the *Highway Capacity Manual: A Guide for Multimodal Mobility Analysis* (HCM2016) should be used in an effort to quantitatively assess and balance the level and quality of performance for each mode. This analysis could result in independent levels of service for pedestrians, bicyclists, transit users, and motor vehicle drivers, with a solution that is designed to provide equivalent levels of safety and service for each mode. Another approach is to emphasize safety by prioritizing the needs of the most vulnerable users of the street. The safety of pedestrians, as the most vulnerable street users, would receive priority in this case.

Traditional measures of effectiveness that include motor vehicle speed, delay, and crash rate will always be important when assessing the performance of a street. However, as multimodal consideration and community livability have become an emphasis of transportation policy within TDOT, it should be understood that urban streets also serve as economic engines. Investments in the character of a street in lieu of its throughput have been shown to increase retail rents, residential property values, and livability of an area. The goal of a successful multimodal design

is to balance the needs of all modes using the roadway, while being good stewards of limited financial resources.

3-204.00 ALLOCATING RIGHT-OF-WAY FOR MULTIMODAL FACILITIES

Multimodal design involves identifying minimum and desired safety and service levels for all modes over the life of the project, and then performing an analysis of modal trade-offs for various design solutions. Descriptive cases for a range of multimodal accommodation solutions are provided on the following pages to demonstrate approaches that may be applicable in a variety of contexts. The first three cases describe roadway sections bounded by curb and sidewalk. These cases are most likely to be found in more densely developed areas such as rural town centers, suburban, and urban context zones. The remaining two cases are for areas without curb and sidewalk and are most likely to be found in less developed rural areas.

The TDOT multimodal facility design process should begin with an assessment of minimum accommodation for each mode, and the relationships between those accommodation alternatives, similar to the examples provided on the following pages.

3-204.01 SEPARATE ACCOMMODATION FOR ALL USERS

Separate accommodation for all users provides the optimum accommodation for all modes of travel in many settings. See *Figure 3-1, Separate Accommodation for All Users*. Key attributes include the following:

- Often the preferred option to provide safer, convenient, and comfortable travel for all users
- Appropriate for areas with moderate to high levels of pedestrian and bicycle demand or activity
- Appropriate for streets with moderate to high motor vehicle speeds
- Appropriate in areas without substantial environmental or right-of-way constraints
- Pedestrians are provided with a sidewalk separated from the roadway by a raised curb and preferably a landscaped buffer
- A bicycle lane, off street path, cycle track, or shoulder suitable for bicycle use is provided

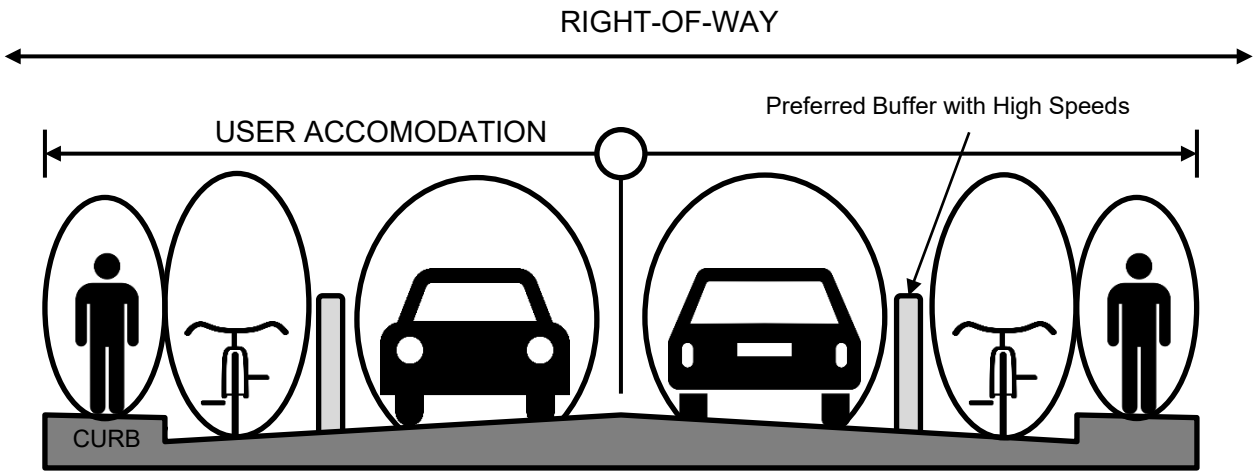

Figure 3-1: Separate Accommodation for All Users

3-204.02 PARTIAL SHARING FOR BICYCLES AND MOTOR VEHICLES

There are instances in which the width necessary to provide optimal accommodation for all users is not available. There are also instances where some sharing and overlap between bicyclists and motor vehicle traffic is acceptable to achieve other environmental or design objectives. Partial sharing for bicycles and motor vehicles is an approach to multimodal accommodation in these situations. See *Figure 3-2, Partial Sharing for Bicycles and Motor Vehicles*. Key attributes include the following:

- Used in areas where the width necessary to provide separate accommodation for all users is not available
- Pedestrians are provided with a sidewalk while space for bicyclists and drivers overlaps somewhat
- Appropriate in areas with low motor vehicle speeds and low to moderate motor vehicle volumes
- Pedestrians are provided with a sidewalk separated from the roadway by a raised curb and preferably a landscaped buffer
- Typical travel lanes combined with narrow shoulders provide maneuvering width for truck and bus traffic within the travel lane; however, bicyclists may be forced to ride along and over the pavement markings
- Narrow travel lanes combined with wide shoulders provide greater separation between motor vehicle and bicycle traffic, but may result in motor vehicle traffic operating closer to the center line or encroaching into the opposing travel lane

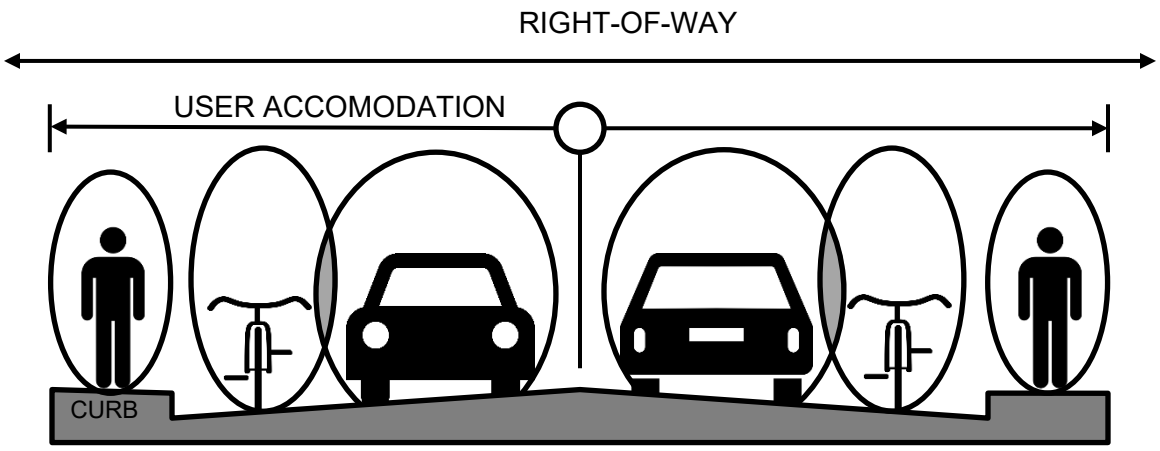

Figure 3-2: Partial Sharing for Bicycles and Motor Vehicles

3-204.03 SHARED BICYCLE/MOTOR VEHICLE ACCOMMODATION

With this option, the accommodation of bicycles and motor vehicles is shared and separate pedestrian accommodation is maintained. See *Figure 3-3 Shared Bicycle/Motor Vehicle Accommodation.* Shared bicycle/motor vehicle accommodation is most likely to be found in the most densely developed urban areas where right-of-way is most constrained. Key attributes include the following:

- Pedestrians remain separate but bicycle and motor vehicle space is shared
- Used in densely developed areas where right-of-way is constrained
- Primarily applicable to local streets where speeds and traffic volumes are low
- Pedestrians are provided with a sidewalk separated from the roadway by a raised curb and preferably a landscaped buffer
- Signs and pavement markings indicating that the roadway is shared between cyclists and motor vehicles should be provided.

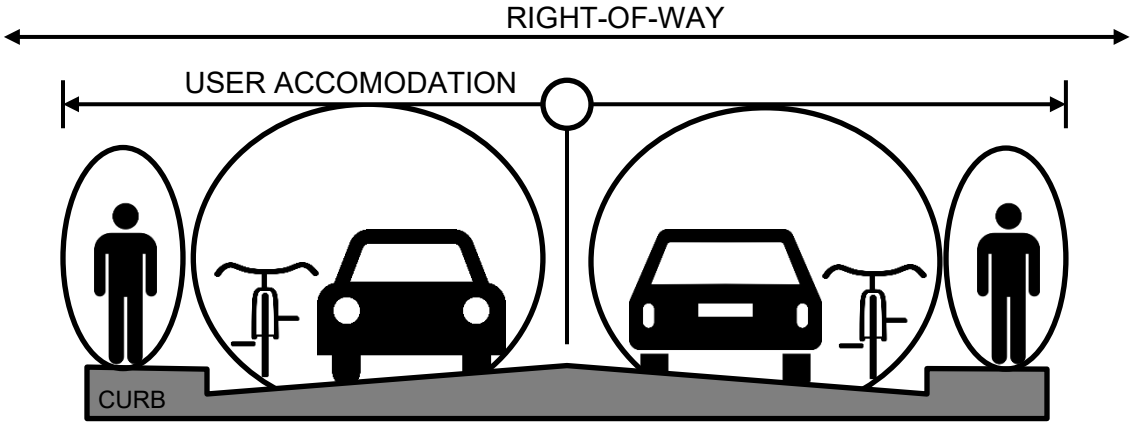

Figure 3-3 : Shared Bicycle/Motor Vehicle Accommodation

3-204.04 SHARED BICYCLE/ ACCOMMODATION

In sparsely developed rural and low-density suburban areas, curbed roadway sections bounded by sidewalk are less common. In these areas, cyclists and other personal transportation device users may use the roadway shoulder (see *Figure 3-4, Shared Bicycle Accommodation*). Shoulder with a typical four (4) percent cross slope is not considered an acceptable ADA compliant pedestrian route. Key attributes include the following:

- A preferred shared bicycle accommodation is to provide an off-street shared-use path
- Bicyclists share the shoulder
- Common in rural or sparsely developed areas
- Appropriate for areas with infrequent bicycle use
- Typical travel lanes combined with wide shoulders provide for increased separation between bicyclists, and motor vehicles. Wider shoulders also provide clearance for emergency stopping and maneuvering
- Typical travel lanes combined with narrow shoulders provide maneuvering width for truck and bus traffic within the travel lane, reducing encroachment into opposing lanes and the shoulder.
- Narrow travel lanes combined with wide shoulders provide greater separation for bicyclists, but may result in motor vehicle traffic operating closer to the center line or encroaching on the shoulder

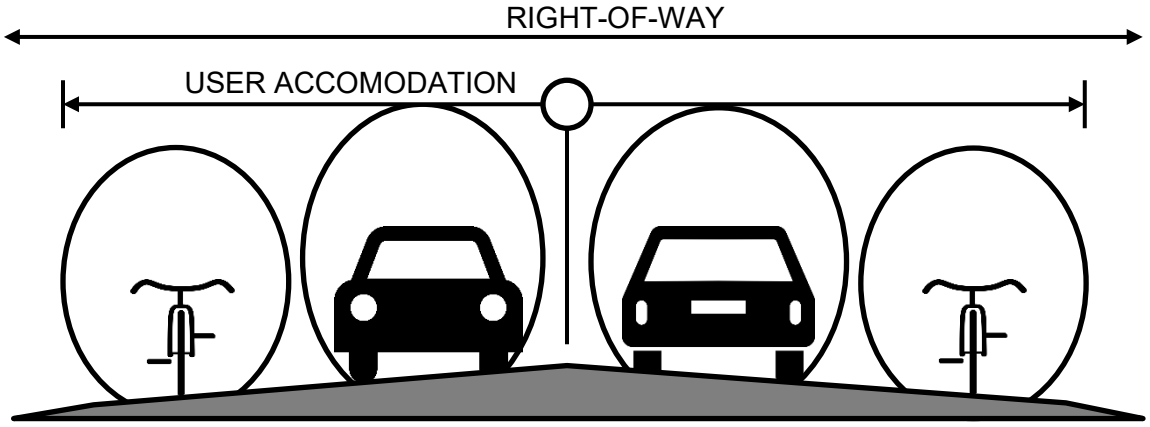

Figure 3-4: Shared Bicycle Accommodation

3-204.05 SHARED ACCOMODATION ALL USERS

Vehicles, bicycles, and pedestrians are sometimes accommodated in one shared travel lane. See Figure 3-5, *Shared Accommodation for All Users*. This condition occurs when there is low user demand and speeds are very low (i.e., local streets), or when severe constraints limit the feasibility of providing shoulders. Key attributes include the following:

- All users share the roadway
- Appropriate where user demands and motor vehicle speeds are very low or when severe constraints limit the feasibility of providing separate accommodation

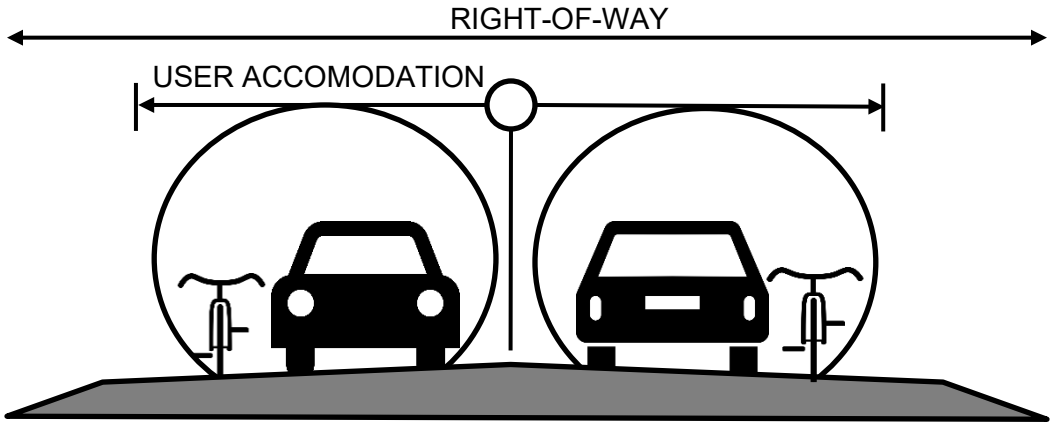

Figure 3-5: Shared Accommodation for All Users

3-205.00 FACILITIES NOT GENERALLY WARRANTING MULTIMODAL ACCOMMODATIONS

Some transportation facility designs may not warrant the provision of dedicated multimodal accommodations for pedestrians, bicyclists, and/or transit riders. Typical exclusions for separate multimodal accommodations include:

- Low-speed, low-volume residential context streets where pedestrians and bicyclists can comfortably share the roadway with motor vehicles
- Rural streets where shoulders provide space for the occasional pedestrian or bicyclist
- On side road tie-ins where there is no existing sidewalk or bicycle accommodation and widening of construction limits for sidewalk or bicycle accommodation would result in disproportionate impacts to adjacent property
- High-speed controlled access highways would not typically warrant sidewalks or bicycle use
- Sidewalks may not be required in rural areas where curb and gutter are placed at the back of the useable shoulder solely for the purpose of reducing construction limits and/or meeting drainage/ storm sewer requirements

SECTION 3 – TDOT ACCESSIBILITY GUIDANCE

3-300.00 GENERAL

As noted in TDOT's *Multimodal Access Policy*, pedestrian facilities shall be designed and built to accommodate persons with disabilities in accordance with the access standards required by the ADA to the maximum extent feasible or to the extent that it is not structurally impracticable or technically infeasible. Sidewalks, shared-use paths, street crossings, and other infrastructure shall be constructed so that all pedestrians, including those with disabilities, can travel independently.

Furthermore, on November 7, 2014, TDOT adopted the United States Access Board's *Proposed Guidelines for Pedestrian Facilities in the Public Right-of-Way (2011)*. These guidelines serve as the *Public Rights-of-Ways Accessibility Guidelines*, or PROWAG.

TDOT's *Roadway Design Guidelines* are intended to meet or exceed current ADA and PROWAG guidance.

3-301.00 ACCESSIBILITY REQUIREMENTS BY PROJECT TYPE

Wherever pedestrian facilities are intended to be a part of a transportation system, federal regulations (28 CFR Part 35) require that those pedestrian facilities meet or exceed ADA guidelines. All new construction or alteration of existing transportation facilities must be designed and constructed to be accessible to and usable by persons with disabilities. FHWA is one of the federal agencies designated by the Department of Justice to ensure compliance with the ADA for transportation projects.

All projects shall review and evaluate the existing pedestrian access and connectivity within the scope of the project to address and correct identified deficiencies not meeting ADA, PROWAG, and TDOT requirements.

All **new construction** projects will be constructed to meet current accessibility requirements.

All **alterations** funded and developed by or for the Department on state right-of-way shall evaluate the existing pedestrian circulation, accessibility and connectivity. Any deficiencies should be identified (i.e., Maintenance Division's Resurfacing PS&E report or Strategic Transportation Investment Division's Report) and included with the project scope. All other projects developed by or for Divisions other than Roadway Design shall follow the same scoping requirements regardless of funding type, funding percentage, or letting type.

Roadway **maintenance** activities do not warrant addressing and correcting ADA deficiencies. Resurfacing is not considered maintenance, but as an alteration.

All **Local Program projects** administered by the Program Development and Administration Division shall follow the same guidance based on project type. Projects developed and let by local agencies shall follow the same guidance since all local agencies are obligated to fulfill FHWA required ADA elements. Projects within TDOT right-of-way shall comply with all TDOT standards, regardless of funding.

3-301.01 NEW CONSTRUCTION PROJECTS

New construction projects address the construction of a new roadway, interchange, or other transportation facility where none existed before. For these projects, pedestrians' needs shall be assessed and included in the project. All pedestrian facilities included in these projects must fully meet the accessibility criteria when built to the extent that it is not structurally impracticable.

TDOT's design development process will assess and ensure that accessibility requirements are addressed during the earliest stages possible to reduce or prevent potential conflicts with various planning, right-of-way, environmental, utilities, or other highway design-related issues. Project scopes may also need to be expanded to meet pedestrian needs.

3-301.02 ALTERATIONS

A roadway alteration is a change to any portion of an existing facility (site, structure, or improvement of a pedestrian or vehicular route) located in the right-of-way that affects or could affect usability, access, circulation, or use of the facility. Alterations could affect the structure, grade, function, and use of the roadway. Any project that affects or could affect the usability of a pedestrian facility is classified as an alteration.

- All new pedestrian facilities included in an alteration that is put in place within an existing developed right-of-way must meet applicable ADA, PROWAG, and TDOT requirements to the maximum extent feasible.
- All existing pedestrian facilities disturbed by or triggered by an alteration must be replaced. The replacement facilities must meet current ADA, PROWAG, and TDOT requirements to the maximum extent feasible.
- If pedestrian facilities are present, curb ramps are required at signalized intersections and other pedestrian crossings.
- Installation of crosswalk markings and applicable signs will be required at pedestrian crossings at signalized intersections, midblock crossings, and other uncontrolled crossings deemed necessary.
- Project shall not have the effect of decreasing the accessibility of a pedestrian facility or an accessible connection to an adjacent building or site below the ADA accessibility requirements in effect at the time of the alteration. Decreasing accessibility for all pedestrians may be required under extreme safety concerns.
- Within the construction limits of an alteration, any existing connection from a pedestrian access route to a crosswalk (marked or unmarked) that is missing a

receiving curb ramp must have a curb ramp installed that meets ADA, PROWAG, and TDOT accessibility requirements to the maximum extent feasible.

- At any intersection in the public right-of-way that has at least one corner served by a public sidewalk or a pedestrian access route, all corners should be evaluated for need of pedestrian landings and crosswalk marking.
- Within the construction limits of an alteration, evaluate all existing curb ramps to determine whether curb ramp design elements meet the current accessibility criteria. Curb ramps that do not meet the accessibility criteria must be modified or replaced to meet applicable accessibility requirements. This may also trigger modification of other adjacent sidewalk facilities to incorporate transitional segments to ensure specific elements of a curb ramp will meet the accessibility criteria. Resurfacing projects are always considered alteration projects and require ADA compliance. Within the construction limits, evaluate all existing crosswalks (marked or unmarked) to determine whether crosswalk design elements meet the accessibility criteria for a legal pedestrian access route. Modify crosswalk slopes to meet the required accessibility standards to the maximum extent feasible.

RESURFACING PROJECTS

Resurfacing PS&E reports should identify all ADA deficiencies. The typical resurfacing project limits may include only 2 legs of an intersection however resurfacing work on any leg of an intersection requires upgrading the entire intersection to meet ADA, PROWAG, and TDOT requirements. Existing pedestrian signals and pushbuttons do not require upgrade during resurfacing; however, the facilities must be accessible. Any curb ramp or sidewalk upgrades must consider locations of existing pedestrian signals and pushbuttons. If there are no existing pedestrian facilities on any approach, installing curb ramps are not required. If pedestrian facilities are installed in a future project, the future project shall meet ADA, PROWAG, and TDOT requirements. If there are any pedestrian signals present during the resurfacing, the corners must all have curb ramps and provide refuge for pedestrians to the maximum extent feasible. Resurfacing the full intersection will trigger ADA requirements.

The following pavement restoration and rehabilitation projects are typically not considered alterations: spot pavement repair; liquid-asphalt sealing, slurry seal, chip seal (Bituminous Surface Treatment- BST), or crack sealing; or lane restriping that does not alter the usability of the shoulder. However, activities such as microsurfacing and Cape Seal (combine chip seal w/ slurry seal) are considered an alteration.

SIGNALIZATION PROJECTS

New Signalization projects generally involve **construction** (signal poles, signal heads, controller box, etc.) of a traffic signal system where an un-signalized intersection previously existed to improve the existing intersection traffic operations. **Signal Improvements** are projects on existing signalized intersections.

Any **new signal** or **signal improvement** projects involving alterations to pedestrian facilities or changes to the intersections function that impact pedestrian facilities (adding lanes or turn islands, etc.) must upgrade all pedestrian facilities. If any portion of the pedestrian facilities

are altered or disturbed, the entire intersection shall evaluate and upgrade to meet ADA compliance (sidewalk, curb ramps, pedestrian signals / pushbuttons, etc.).

ADA improvements are triggered when the pedestrian signal operations, and pedestrian software (the internal logic of the controller), or ITS software effecting pedestrian signal operations are altered. Replacement of pedestrian signal head, permanent signal timing adjustments will trigger ADA if the modification effects pedestrian intervals, signal Phases, cycle length, or sequence to include larger walk times, larger clearance times, or to program parameters to extend the walk indication (Rest in walk) when coordinated signalization used. Project must bring all pedestrian facilities, including curb ramps, pedestrian pushbuttons, and pedestrian signal heads into full ADA compliance per PROWAG R209.2.

Vehicular signal controller alterations and vehicular software alterations as well as vehicular signal head replacement does not trigger the requirement to bring all pedestrian facilities at the intersection into full ADA compliance (PROWAG R209.2).

Intersections that do not currently have nor are proposed to install sidewalks and curb ramps shall not install pedestrian signals as part of signal projects. If there are plans for future development to include sidewalk installation, pedestrian signals should be installed at that time. If an existing intersection has pedestrian signals but no sidewalks or curb ramps, accessible curb ramps and landing shall be installed to make the pedestrian pushbutton accessible and give pedestrians safe refuge to the maximum extent feasible.

Project cost is not an acceptable reason to fail to construct or delay completing ADA required improvements for accessibility compliance when existing pedestrian facilities are present. ADA improvements must be installed prior to or during the project, not after.

Projects that do not alter or disturb any existing pedestrian facilities (curb ramps, crosswalks, pedestrian signals, pedestrian signal timing, sidewalks, etc.) and do not involve upgrades to the *signal controller and software as per* PROWAG R209.2 are not required to improve their existing facilities.

Projects developed by other agencies should follow the above guidance.

EXCEPTIONS

It may not always be possible to fully meet the applicable accessibility requirements during alterations of existing facilities. If such a situation is encountered, consult with the TDOT ADA Coordinator to develop a workable solution to meet the accessibility requirements to the maximum extent feasible. Cost is not to be used as a justification for not meeting the accessibility criteria. Physical terrain or site conditions that would require structural impacts or environmental impacts to achieve full compliance with the accessibility criteria are some of the factors that might be used to determine that the maximum extent feasible is achieved. If it is determined to be virtually impossible to meet the accessibility criteria for an element, complete the Design Waiver Form (See Chapter 2-201.00) and submit for approval. Documentation for the decision, along with the signed waiver form, shall be included in the project folder.

If there is uncertainty as to whether a project meets the definition of an alteration project, consult with the TDOT ADA Coordinator at TDOT.ADA@tn.gov.

3-301.03 MAINTENANCE PROJECTS

Roadway maintenance activities are not considered alterations and do not require simultaneous improvements to pedestrian accessibility under the ADA. Maintenance activities include actions that are intended to preserve the roadway system, retard future deterioration, and maintain the functional condition of the roadway without increasing the structural capacity. Typical maintenance activities consist of re-tracing existing pavement markings, pothole patching, mowing, roadside ditch cleaning, guardrail repair, and trash pickup, and do not warrant addressing and correcting existing ADA deficiencies.

Signal maintenance activities are those that are due to damaged or outdated technology. Maintenance activities are limited in nature and generally do not alter or disturb the facilities or function of the intersection. As such these activities generally do not trigger ADA upgrades. In instances where portions of sidewalk or curb ramps are disturbed as part of maintenance activities, good judgment should be used to ensure that any replacement of these disturbed facilities are in accordance with all applicable ADA guidelines.

SECTION 4 – ACCESSIBLE PEDESTRIAN TRAVEL

3-400.00 GENERAL

Pedestrian travel is a vital transportation mode. It is used at some point by everyone and is a critical link to everyday life for many. Designers must be aware of the various physical needs and abilities of pedestrians to ensure facilities provide universal access.

Under Tennessee law, pedestrians have the right-of-way at all unmarked crosswalks, driveways, and marked crosswalks. However, pedestrians must act responsibly, using pedestrian signals and sidewalks where they are available. **TCA 55-8 Series**

Section 504 of the Rehabilitation Act and the Americans with Disabilities Act of 1990 (ADA) requires pedestrian facilities to be designed and constructed so they are readily accessible to and usable by persons with disabilities. This chapter provides accessibility criteria for the design of pedestrian facilities that meet applicable state and federal standards.

The pedestrian facilities included in a project shall be determined during the project planning phase based on access control of the highway, local transportation plans, comprehensive plans and other plans (such as Safe Route to School Plans developed by schools and school districts), the roadside environment, existing and projected pedestrian volumes, user age group(s), and the continuity of local walkways along or across the roadway.

If a project scope proposes to exclude curb ramps, they can be funded and installed separately. However, all work must be completed **before** the project (i.e., resurfacing) or at the same time, **not after**. See the Supplement to the 2013 DOJ/DOT Joint Technical Assistance on the Title II of the Americans with Disabilities Act Requirements to Provide Curb Ramps when Streets, Roads, or Highways are Altered through Resurfacing. For any project in which this applies, add a special note that specifies the project number under which the curb ramps will be installed.

If a project is a maintenance project, curb ramps are not required at the time of the improvement. Alteration and maintenance projects are defined in the Department of Justice/Department of Transportation Joint Technical Assistance on the Title II of the Americans with Disabilities Act Requirements to Provide Curb Ramps when Streets, Roads, or Highways are Altered through Resurfacing document.

3-401.00 PROVISION OF PEDESTRIAN FACILITIES

Pedestrian facilities typically include sidewalks, shared-use paths, and walkways as well as all other features of the pedestrian route such as crosswalks, curb ramps, pedestrian signals and pushbuttons. Pedestrian facilities can either be immediately adjacent to streets and highways or separated from them by a buffer. Pedestrian demand and accommodation are usually aligned

with surrounding land uses and should ideally be evaluated in the planning process to provide ample pedestrian space and roadside elements. For example, recommended sidewalk widths along urban commercial streets in dense areas should be wider than on urban collectors in residential areas with five (5) feet being the minimum width for either.

Designing pedestrian facilities extends much further than the TDOT Standards and ADA/PROWAG design criteria discussed in this chapter. Similarly, comfortable and convenient pedestrian access to and from transit stops and stations presents important opportunities to strengthen and expand the transportation system and provide more travel options for the public.

3-402.00 PEDESTRIAN ROUTE SELECTION

Where pedestrian routes are provided along roadways, they shall, to the extent it is not structurally impracticable, meet the minimum widths shown in *Table 3-1, Minimum Pedestrian Route Widths for Various Roadway Functional Classifications and Context*. Accommodation can be provided by either dedicated pedestrian sidewalks or shared-use paths, which are facilities that serve pedestrians, bicyclists, and other users such as skaters. Sidewalks are typically provided on both sides of the street, where a shared-use path is typically provided on only one side. A sidewalk may be provided on the opposite side of the street from the shared-use path.

The sidewalk widths listed are minimum widths. The widths provided for design should be determined in consultation with the local agency and based on the expected volume of pedestrians at build-out of the land use along the project corridor. Locally adopted sidewalk standards may differ and should be coordinated with local agencies understanding that five (5) foot wide is the minimum. Shared-use paths that are not adjacent to or serving a roadway shall have a maximum running grade of five (5) percent. Additional guidance on the design of shared-use paths is provided in Section 6 of this Chapter.

Minimum Pedestrian Facilities Design Guidelines (When Provided)		
Roadway Classification / Context	Sidewalk / Walkway	Width
Rural Roadways (< 2,000 ADT)	Sidewalks on both sides	SW (5 ft)
	Shared-Use Path	SUP (10 ft)
Rural Roadways (> 2,000 ADT)	Sidewalks on both sides	SW (5 ft)
	Shared-Use Path	SUP (10 ft)
Suburban Roadways	Sidewalks on both sides	SW (5 ft)
	Sidewalk + Shared-Use Path	SUP (10 ft)
Major Arterials (Residential)	Sidewalks on both sides	SW (6 ft)
Minor Arterial and Urban Collector (Residential)	Sidewalks on both sides	SW (5 ft)
All Commercial Area Urban Streets	Sidewalks on both sides	SW (6 ft)
All Industrial Area Streets	Sidewalks on both sides	SW (5 ft)
SW = Sidewalk, SUP = Shared-Use Path		

Table 3-1: Minimum Pedestrian Route Widths for Various Roadway Functional Classifications and Context

Pedestrian routes should be separated from the roadway curb to provide a pedestrian buffer, to serve as a place to locate mailboxes, to serve as a planting strip or furnishing zone, to serve as a place for transit stops/shelters, and to benefit driveway slopes. *Table 3-2, Pedestrian Route Buffer Requirements by Vehicle Operating Speed* provides minimum and preferred separations, or buffers, from the edge of the traveled way to the nearest edge of the sidewalk or shared-use path. Note the buffer can be paved, but its width is not included in the minimum pedestrian facility width listed in *Table 3-1, Minimum Pedestrian Route Widths for Various Roadway Functional Classifications and Context*. Shoulders, bicycle lanes, or parking lanes on the road-side of the curb can be included in the buffer width, however some separation from the curb to the edge of the sidewalk is still recommended as a place to locate mailboxes and benefit driveway slopes. If a buffer equal to the minimum separation guidance is not feasible on higher speed routes, the Designer should consider the placement of a positive protective device (i.e., a barrier).

Pedestrian Route Separation Requirements (ft.)		
Posted Speed	Buffer (Min.)	Buffer Preferred
≤ 35 mph	0 *	5
40 mph	4.5	8
45 - 55 mph	12.5	16.5

*A sidewalk buffer is not required at this speed range. However, a 5-foot buffer (min.) shall be provided between the travel lane and a shared-use path, see *Chapter 3 Section 3-606.00* for additional guidance.

Table 3-2: Pedestrian Route Buffer Requirements by Vehicle Operating Speed

On rural sections with a paved shoulder, the minimum pedestrian facility buffer is either five (5) feet from the edge of the traveled lane or the dimensions listed in *Table 3-2, Pedestrian Route Buffer Requirements by Vehicle Operating Speed*, whichever is greater. Under constrained conditions, a seven (7)-foot minimum buffer from the edge of the traveled lane for speeds of 45 mph and above may be allowed with completion of a *Design Waiver Form* and subsequent approval by TDOT. See *Chapter 3-908.00*. Where a ditch is present, the sidewalk should be placed on the far side of the ditch. If the appropriate buffer cannot be attained, a physical barrier is needed.

3-403.00 SIDEWALK DESIGN ON CURBED ROADWAYS

Most sidewalks are located along streets with curb and gutter in urban, suburban, and rural town center contexts. In suburban settings, the sidewalk is normally not adjacent to building frontages as it may be in more densely developed urban and town settings. In more densely developed locations, sidewalks may be closely integrated with other roadside functions such as street trees/landscaping, street furniture, bicycle racks, sidewalk café seating, and building frontages. The portion of the roadside area behind the curb that is dedicated to pedestrian travel is typically referred to as the pedestrian access route and must be designed to meet ADA and other pedestrian needs. PROWAG guidelines require a pedestrian access route be provided within sidewalks and other pedestrian circulation paths located in the public right-of-way. A pedestrian access route is defined as a continuous and unobstructed path of travel provided for pedestrians with disabilities.

Pedestrian access routes that provide direct routes, with few meanders, are typically preferred by those with visual impairments. Additional guidance concerning the pedestrian access routes width, cross slope, grade, and pavement markings is provided below.

Width - The pedestrian access route is intended for pedestrian travel. Its width should vary by context and the pedestrian activity generated by the adjacent and area land use. A minimum continuous and clear pedestrian access route width of five (5) feet must be maintained. In constrained conditions, it is permissible to have a clear width of four (4) feet, with a *Design Waiver Form* approval. This minimum width of four (4) feet must be maintained around items

commonly placed within the sidewalk area, including signposts, luminaire supports, signal poles, etc. In commercial areas, the minimum recommended width for pedestrian access routes is six (6) feet, due to the anticipated higher level of pedestrian activity.

Cross Slope – TDOT's standard cross slope for pedestrian access routes is 1.5 percent to allow for construction tolerances. If necessary due to design constraints or in spot locations, a cross slope between one (1) and two (2) percent is allowable. The one and a half (1.5) percent maximum cross slope applies across driveways. A cross slope of less than one (1) percent would not shed water well after a rain event. Ponded water can become slippery, obscure surface discontinuities, freeze in cold weather, and degrade the sidewalk, increasing the need for maintenance. Sidewalks typically slope and drain towards the roadway, where the stormwater is collected in the roadway's curb and gutter network. In unique situations, the sidewalk may slope and drain away from the roadway. In these instances, the Designer must ensure the stormwater will not pond and collect on the throughway zone.

Grade - Longitudinal grades, which run parallel to the pedestrian path of travel, can be challenging for pedestrians if they are too steep. PROWAG, TDOT, and ADA requires that longitudinal grades not exceed five (5) percent for pedestrian access routes outside of a street or highway right-of-way, such as a shared-use path. Pedestrian access routes within street crossings are also at five (5) percent. This maximum does not account for construction tolerances. Pedestrian access routes adjacent to roadways with grades steeper than five (5) percent may match, but not exceed, the general grade of the roadway.

Pavement Markings – Pavement markings are typically not applied to the pedestrian access routes, except at certain crosswalk locations. Marked crosswalks are designed to keep pedestrians together where motorists can see them, and where they can cross more safely across the flow of vehicular traffic. They also aid visually impaired users to remain within the crosswalk area. Marked crosswalks are required at designated school crossings and at signalized intersections that have sidewalks with curb ramp access. Marked crosswalks should be considered at other unsignalized locations that have high pedestrian activity. Refer to standard drawing T-M-4 and MUTCD Section 3B.18 for additional guidance on marked crosswalks. The longitudinal crosswalk (piano key) markings are used on all TDOT routes.

3-404.00 SIDEWALK DESIGN ON NON-CURBED ROADWAYS

Most sidewalks are along streets with curb. However, sidewalks can and do exist along streets without curb, typically in rural and some suburban areas. When the street does not have curb, the sidewalk should be placed a minimum of five (5) feet measured from the outside edge of shoulder to the inside edge of the sidewalk. If a roadside ditch is present, the sidewalk should be placed on the far side of the ditch from the roadway for added lateral separation. When the sidewalk is parallel to a roadway with a posted speed limit of 45 mph or more, greater lateral offset is recommended from the edge of the travel lane. If the sidewalk is located within the clear zone of a high-speed roadway, consideration should be given to a crash-worthy barrier to protect the users of the sidewalk.

The design guidance provided in the previous section on curbed roadways also applies to sidewalk design without curbs. For example, the standard cross slope of the sidewalk is 1.5 percent, to allow for construction tolerances not to exceed two (2) percent and must be at least one (1) percent. Cross slopes less than one (1) percent can lead to ponding and mud accumulation on the sidewalk. Additionally, the graded areas adjacent to the sidewalk must allow water to drain off and away from the sidewalk.

3-405.00 PEDESTRIAN CROSSINGS AND CROSSWALK MARKINGS AT INTERSECTIONS

In Tennessee, TCA 55-8-101(16) provides that both unmarked and marked crosswalks may exist as described below, respectively:

1. That part of a roadway at an intersection included within the connections of the lateral lines of the sidewalks on opposite sides of the highway measured from the curbs or, in the absence of curbs, from the edges of the traversable roadway

AND/OR

2. Any portion of a roadway at an intersection or elsewhere distinctly indicated for pedestrian crossing by lines or other markings on the surface

Additionally, pedestrians are given right-of-way at locations where pedestrian signals exist (TCA 55-8-111).

An unmarked crosswalk is created only when a sidewalk on one side of the roadway continues in that same direction on the opposite side OR if there are pedestrian signals. Designers have flexibility at many intersections to determine if and where to place pedestrian crossings but should also be aware of unmarked crosswalks that are not currently ADA Accessible. Designers should consider impacts at intersections with incomplete or asymmetrical pedestrian circulation. Certain intersection legs may not meet the definition of unmarked crosswalks. The most common examples may be at “T” intersections, where there would be no pedestrian right-of-way given for crossing from the stem of the “T" across to the top of the “T” unless the pavement is marked OR a pedestrian signal is provided OR a pedestrian path continues in the same direction, extending the stem of the “T”. In other words, sidewalks that are perpendicular to each other (at 90 degrees) interrupted by a roadway do not automatically create legal crosswalks. See *Figure 3-6, Unmarked Crossing* below for intersection examples showing where marked or unmarked crosswalks exist.

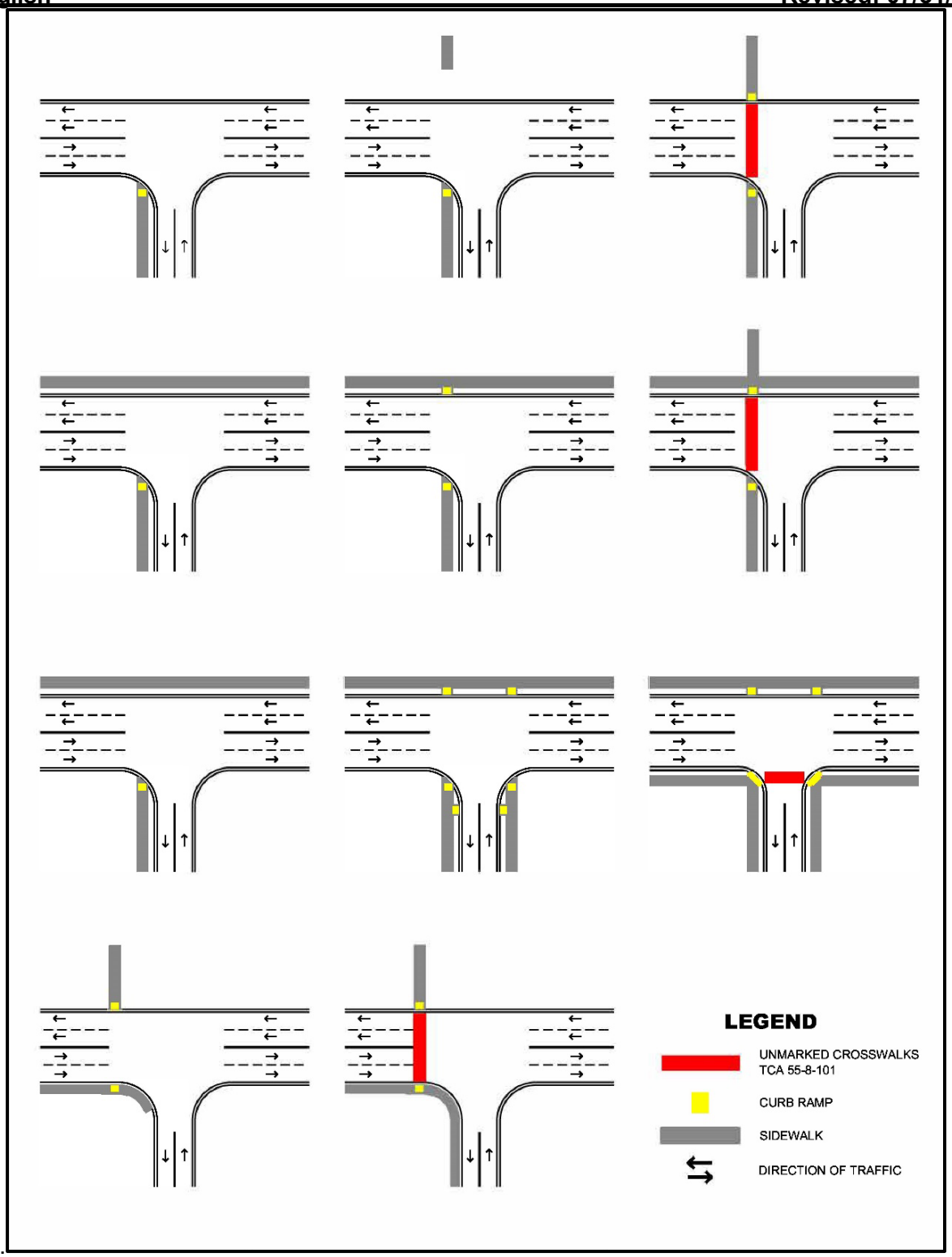

Figure 3-6 – Unmarked Crosswalk

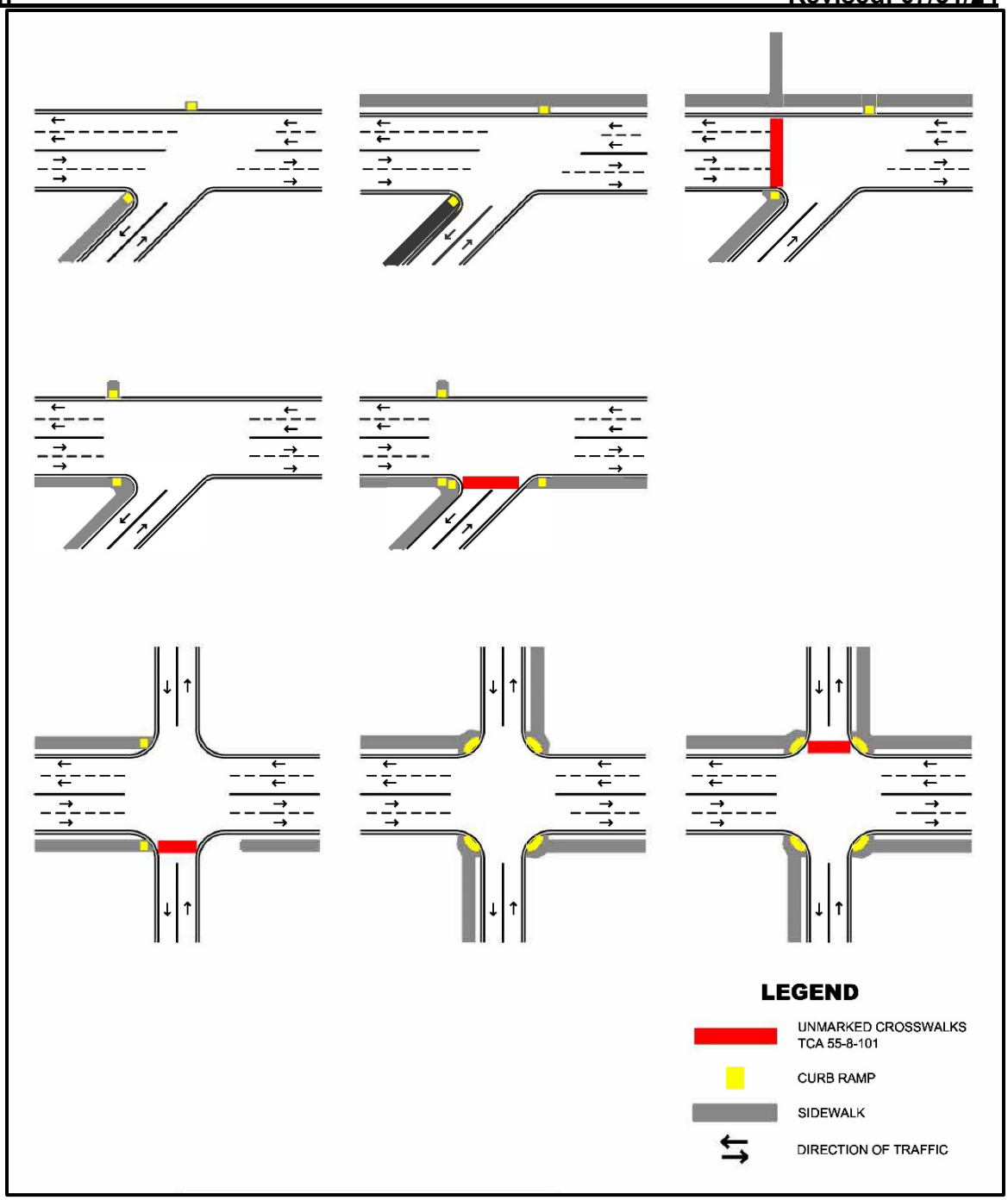

Figure 3-6 – Unmarked Crosswalk - Continued

Note: If the pavement is marked at any location OR if there are pedestrian signals installed, the crossing is a crosswalk with pedestrians having the right-of-way. Additionally, the manner in which the intersection is controlled (yield, stop, or signal w/o ped signals) or the presence of a curb ramp does not automatically create a crosswalk. A particular intersection may be signal controlled, stop/yield controlled, or uncontrolled.

Intersections without pedestrian facilities on opposite corners do not require crosswalk pavement markings, ADA ramps, or other considerations for pedestrians. If a project includes the construction of new or alterations to existing pedestrian facilities, such as sidewalk or shared-use path, the designer should evaluate the existing roadway and intersection conditions to provide safe and reliable crosswalks for all users. At intersections where there are pedestrian facilities at some corners, designers should evaluate pedestrian need and safety in choosing whether to mark a crosswalk and provide accessibility on opposite sides. If an intersection does not have sidewalk but does have other existing pedestrian facilities such as pedestrian signals; then, the pavement shall be marked and accessible pedestrian refuges installed. Finally, if the presence of two curb ramps across an intersection leg does not currently meet the definition of a crosswalk as shown in *Figure 3-6, Unmarked Crossings* designers should mark the crossing to remove any confusion on the part of pedestrians or vehicles as to the legality of that crossing. These steps will remove any possible confusion regarding the use of the crossing.

During the development of 3R projects the designer should evaluate the existing roadway conditions and study all existing controlled or uncontrolled crossings to provide a safe access to pedestrians and reliable transportation for motorists. At a minimum all crosswalks are required to have curb ramps installed.

Controlled (signal, stop or yield) pedestrian crossings on state routes require crosswalk pavement markings, along with stop bar or yield marking with signs in accordance with MUTCD. It is recommended but not mandatory to have marked crosswalks at all controlled pedestrian crossings on non-state routes. See *Figure 3-6, Unmarked Crossings.*

3-405.10 UNCONTROLLED PEDESTRIAN CROSSINGS

Uncontrolled Pedestrian Crossings are those crosswalks across legs of an intersection without signal, stop, or yield control. Most common would be intersecting minor street with stop control along a major roadway with no traffic signals or stop control. At these **uncontrolled pedestrian crossings,** crosswalks exist at all locations that meet the definition of crosswalks under TCA 55-8-101. These crosswalks could pose an

increased risk for vehicles and pedestrians; therefore, sound engineering judgement/principles and behavior of pedestrians should be considered.

Existing uncontrolled pedestrian crossings may not have existing marked crosswalks or compliant ADA curb ramps. During the development of 3R projects the designer should identify and study all existing uncontrolled crossings to provide a safe access to pedestrians and reliable transportation for motorists. *At a minimum all pedestrian crossings are required to have curb ramps installed.*

The decision to mark an uncontrolled crosswalk, provide signs or other safety measures is one that is based on sound engineering judgement, that considers the demands (crash history, etc.) and behavior of pedestrians and drivers at specific locations. The MUTCD states the following on crosswalk marking at uncontrolled locations.

Section 3B.18 Crosswalk Markings

> *Crosswalk lines should not be used indiscriminately. An engineering study should be performed before a marked crosswalk is installed at a location away from a traffic control signal or an approach controlled by a STOP or YIELD sign. The engineering study should consider the number of lanes, the presence of a median, the distance from adjacent signalized intersections, the pedestrian volumes and delays, the average daily traffic (ADT), the posted or statutory speed limit or 85th-percentile speed, the geometry of the location, the possible consolidation of multiple crossing points, the availability of street lighting, and other appropriate factors.*
>
> *New marked crosswalks alone, without other measures designed to reduce traffic speeds, shorten crossing distances, enhance driver awareness of the crossing, and/or provide active warning of pedestrian presence, should not be installed across uncontrolled roadways where the speed limit exceeds 40 mph and either:*
> *A. The roadway has four or more lanes of travel without a raised median or pedestrian refuge island and an ADT of 12,000 vehicles per day or greater: or*
> *B. The roadway has four or more lanes of travel with a raised median or pedestrian refuge island and an ADT of 15,000 vehicles per day or greater.*

Additionally, in 2018 the FHWA issued a comprehensive document "Guide for Improving Pedestrian Safety at Uncontrolled Crossing Locations" to assist Designers on what countermeasures can be installed to increase driver awareness and pedestrian safety and when it is most appropriate to use those measures.

It is important to note that when using this table, the TDOT AADT ranges for the three columns are **AADT<10,000**; **10,000<AADT>15,000**; **AADT>15,000**. At certain

types of uncontrolled crossings, such as roundabouts, single-lane entries and exits are preferred for pedestrian crossings. Splitter islands should be designed to fully accommodate pedestrians as a refuge location.

3-405.15 CLOSING CROSSWALKS

Existing crosswalks may be present which pose an excessive safety concern for pedestrians. When this happens, designers should first look to improve safety at the crossing utilizing proven countermeasures such as pavement marking, advance signs, improved street lighting, and reducing speed limits. In rare circumstances, a particular pedestrian crossing should be closed. Closing a sidewalk is a last resort and should be pursued only when the crosswalk has a history of safety issues and when other efforts at safety improvement were attempted and found to be ineffective. The act of removing crosswalk pavement marking or choosing not to install ADA Curb Ramps is insufficient to consider a crossing as closed. The following requirements apply when it is determined that closing the crosswalk is the only safe alternative:

- Provide a physical barrier and signs to indicate that the crossing is closed for all users.
- Provide a reasonable alternate route that all pedestrians can use. The route should include multiple countermeasures for safe pedestrian crossing. Most importantly, the route should be located within a reasonable distance from the closed crossing.

3-405.20 CROSSWALK MARKING AND TYPES

Crosswalk pavement marking shall be provided along state routes at signal-controlled intersections at pedestrian crossings, at all stop/yield controlled pedestrian crossings, and any mid-block crossings.

Marked crosswalks can be one of two pavement marking configurations: 1) Longitudinal, which is sometimes referred to as “piano keys”, or 2) transverse. Longitudinal (piano keys) markings should be used where added emphasis is needed for the crosswalk, and on high speed and/or high ADT facilities to improve the visibility of location for motorist. Longitudinal and transverse crosswalks are shown in Roadway Standard Drawing T-M-4. Longitudinal and transverse crosswalks are the only crosswalk markings adopted by the department. If any deviation from the standard is proposed, the Designer is required to adhere to crosswalk design requirements contained in the MUTCD Section 3B.18 as well as PROWAG.

3-405.30 PEDESTRIAN CROSSING SAFETY CONSIDERATIONS

Designers should evaluate existing and proposed crosswalk locations on any new construction or rehabilitation project. Assuring the safety of both pedestrians and vehicles is the priority of every facility designed. Designer should evaluate, stopping sight distance, line of sight, turning movements to determine if pedestrian crossings warrant crosswalk, pavement marking, flashing beacons, advanced signs etc. It is important to evaluate illumination need and placement options since the practice offers great safety benefits.

It is critical to note that the decision to not mark a pedestrian crossing does not eliminate the requirement of a designer to make that crosswalk accessible, as it does not eliminate the legal right of pedestrians to cross or of vehicles to yield to those pedestrians.

3-405.40 CROSSWALK MARKING ARCHITECTURAL FEATURES

Asphalt or concrete are the proper materials to be used for the walking surface. A different look can be achieved by using stamped patterns. The placement of stamped patterns should meet Roadway Drawing T-M-4. Crosswalks may be textured on the edges but should maintain a five (5)-foot smooth section in the middle and must be marked with transverse (parallel) reflective pavement marking. Brick, granite, and cobblestones should not be used in accessible pathways. A reasonable pathway shall be provided approaching to crosswalks free of permeant obstructions i.e., light, ped, signal poles, guy wires, tree, sign supports, traffic control box, as well as other utilities such as fire hydrant, pay parking stations, ballads, planters.

3-405.50 UNMARKED CROSSWALKS

While having ADA accessible crosswalks is mandatory, leaving some crosswalk locations unmarked may be acceptable and even preferred on some roadways per engineering decision. While all controlled crossings (stop, yield, or signal) should have marked crosswalks, uncontrolled crossings may not require marked crosswalk treatment if conditions meet the minimum safety standards.

3-405.60 ACCESSIBLE CROSSWALK DESIGN ELEMENTS

Crosswalk surfaces should be even, free of joints (less than ½”), lips (less than1/4”) and not slippery. Designer should avoid utility structures such as manholes, drainage grates and place crosswalks to minimize the walking distance across the vehicle traveled way. This could include applying pedestrian focused design treatments such as reducing lane widths, minimizing turning radii, providing pedestrian refuge islands, constructing

curb extensions, and limiting the use of turn lanes. Designer should confirm the roadway running slope and cross slope is in accordance with PROWAG 302 where crosswalks are proposed and when project scope would permit the altering of the roadway geometry. Where on-street parking is present and minimum radii can be met at the intersection, the Designer should consider curb extensions to further minimize the distance required to travel by pedestrians. The lateral offset of the curb extension should be at least one (1) foot from any through movement traffic such as motor vehicles or bicycle lanes. Refer to *Chapter 3-703.00* for additional information on curb extensions.

3-406.00 CURB RAMPS AND DETECTABLE WARNING SURFACES

Functional Design Plans for new construction or reconstruction, and repaving projects shall accommodate the appropriate curb ramp and truncated dome surface details shown on the current Standard Drawings. TDOT standards shall be used on all projects funded by federal or state. Curb ramps shall have only a broom finish. The curb ramp Standard Drawings detail multiple layouts of curb ramps and blended transitions that can be used at intersections depending upon the site layout, topography, and right-of-way constraints. Perpendicular design curb ramps are the preferred type to be used. Parallel, blended transition, and lowered corner curb ramps are appropriate for areas with right-of-way constraints. Designers shall indicate the type of ramp (TDOT Standard Drawing number) and all ramp features (landings, ramp/transitions, detectable warnings, pushbutton locations, etc.) to be used at each corner on the plans. Designers should use the estimated quantities for a 90-degree intersection on a 0.0 percent grade when calculating quantities for intersections other than 90 degrees or with grades other than 0.0 percent. Limits of payment for curb ramps are shown on the Standard Drawings.

Detectable warning surfaces (truncated domes) shall be used with all curb ramps and blended transitions. Detectable warnings shall extend the full width of any flush transition from a ramp to the curb or roadway.

Refer to the MM-CR-Series Roadway Standard Drawings for details. Additional information concerning curb ramps and truncated domes is provided in the following paragraphs.

Curb ramps and blended transitions shall connect the pedestrian facility at each pedestrian street crossing. Perpendicular curb ramps have a running slope that cuts through or is built up to the curb at right angles or meets the gutter break at right angles at the tangent of the curb radius. Parallel curb ramps have a running slope that is in-line with the direction of sidewalk travel and lowers the sidewalk to a level turning space where a turn is made to enter the pedestrian street crossing. Blended transitions are raised pedestrian street crossings, depressed corners, or similar connections between the pedestrian access route at the level of the sidewalk and the level of the pedestrian street crossing that have a grade of less than five (5) percent.

In general, perpendicular design curb ramps are preferable when geometric conditions allow their use. Curb ramps are preferred for each crosswalk direction; most corners should therefore have two (2) ramps. In alterations where existing physical constraints prevent two (2)

curb ramps from being installed at a street corner, a single ramp or blended transition is permitted at the corner. Single or radial curb ramps shall be designed to avoid directing pedestrians into moving vehicular traffic in any direction. Detailed design information can be found in Roadway Standard Drawings MM-CR-1 through MM-CR-9.

The running slope of curb ramps shall be a minimum of five (5) percent and a maximum of 8.3 percent but shall not require the ramp length to exceed 15 feet. Blended transition curb ramps have a maximum running slope of less than five (5) percent.

Detectable warning surfaces indicate the boundary between pedestrian and vehicular routes where there is a flush connection and the curb is missing. They serve the need of people with vision impairments. Typical placement locations include at curb ramps, pedestrian refuge islands, and railroad crossings. However, detectable warning surfaces are not required at cut-through pedestrian refuge islands that are less than six (6) feet in length because detectable warning surfaces must extend two (2) feet (minimum) on each side of the island and be separated by a minimum two (2)-foot length of island without detectable warning surfaces. Installing detectable warning surfaces at cut-through pedestrian islands that are less than six (6) feet in length would compromise the effectiveness of detectable warning surfaces. Where a cut-through pedestrian refuge island is less than six (6) feet in length and the pedestrian street crossing is signalized, the signal should be timed for a complete crossing of the street.

Detectable warning surfaces should also not be provided at crossings of residential driveways since the pedestrian right-of-way continues across residential driveway aprons. However, two-way commercial driveways, driveways with yield or stop control, driveways that function like a roadway or contain other features that pose additional risk to pedestrians, may need detectable warning surfaces provided at the junction between the pedestrian route and the driveway vehicle route.

Detectable warning surfaces shall contrast visually with the adjacent gutter, street, or pedestrian facility surface. Detectable warning surfaces shall extend two (2) feet in the direction of pedestrian travel. At curb ramps, detectable warning surfaces shall extend the full width of the ramp. Five (5) foot wide curb ramps shall have five (5) foot wide truncated domes. At shared-use path crossing, detectable warning surfaces shall extend the full width of the path. Examples of TDOT-compliant detectable warning surfaces are shown in Roadway Standard Drawing MM-CR-1. Detectable warning surface shall be yellow, rigid composite, polymer plate. Cast-in-place are preferred to surface applied, bolted down detectable warnings with new curb ramps. Plates can be applied to compliant existing curb ramps; care is needed to assure the plates are flush. New curb ramps shall not have surface applied detectable warnings.

When a project's limits begin or end at an intersection, all approaches to the intersection must be upgraded with similar multimodal features such that pedestrians of all abilities can traverse the intersection. Where curb ramps are installed, they must be installed in all quadrants of an intersection that are connected by pedestrian facilities.

3-407.00 MIDBLOCK PEDESTRIAN CROSSINGS

This section addresses several ways to facilitate non-intersection pedestrian crossings at medians and refuge islands and midblock crossings.

Wide multilane streets are often difficult for pedestrians to cross, particularly when operating speeds are high and there are insufficient gaps in vehicular traffic because of heavy volumes. Raised medians and traffic islands with a pedestrian refuge area should be considered on roadways with one or more of the following conditions:

- Two-way arterial with intermediate to high speeds (greater than 35 mph), moderate to high average daily traffic (ADT), and high pedestrian volumes
- Significant pedestrian crash history
- Near a school or other community center
- Crossing distance exceeds 30 feet
- Midblock transit stops
- Complex or irregularly shaped intersections

Median refuge islands should be considered in curbed sections of roadways in urban and suburban areas, particularly in areas where there are mixtures of significant pedestrian and vehicle traffic (more than 12,000 ADT) and intermediate or high travel speeds. On non-curbed sections of roadways, median refuge islands are applicable on roadways with posted speeds of ≤ 40 mph or design speeds ≤ 45 mph. *Table 3-3, Recommendations for Installing Midblock Crosswalks* provides guidance for when a location is a candidate for a midblock crosswalk (C), when a midblock crosswalk may be considered with additional pedestrian crossing enhancements (P), and when a midblock crosswalk should not be installed without additional enhancements (N). These additional enhancements could include median refuge islands (which reduce crossing distance along with increasing safety for pedestrians), raised crosswalks, and pedestrian signalization. Longitudinal crosswalk markings shall be used on all midblock crossings. For additional guidance, refer to the footnotes provided at the bottom of *Table 3-3, Recommendations for Installing Midblock Crosswalks* and Roadway Standard Drawings T-M-4A and T-M-4B.

Recommendations for Installing Midblock Crosswalks*					
Vehicle ADT	Speed Limit**	Roadway Type (Number of Travel Lanes and Median Type)			
		Two lanes	Three lanes	Multilane (four or more lanes) with raised median***	Multilane (four or more lanes) without raised median
≤ 9,000	30 mi/h	C	C	C	C
	35 mi/h	C	C	C	P
	40 mi/h	P	P	P	N
>9,000 to 12,000	30 mi/h	C	C	C	P
	35 mi/h	C	P	P	P
	40 mi/h	P	P	N	N
>12,000 to 15,000	30 mi/h	C	P	P	N
	35 mi/h	C	P	P	N
	40 mi/h	N	N	N	N
> 15,000	30 mi/h	C	P	N	N
	35 mi/h	P	N	N	N
	40 mi/h	N	N	N	N

* These guidelines include intersection and midblock locations with no traffic signals or stop signs on the approach to the crossing. They do not apply to school crossings. A two-way center turn lane is not considered a median. Crosswalks should not be installed at locations that could present an increased safety risk to pedestrians, such as where there is poor sight distance, complex or confusing designs, a substantial volume of heavy trucks, or other dangers, without first providing adequate design features and/or traffic control devices. Adding crosswalks alone will not make crossings safer, nor will they necessarily result in more vehicles stopping for pedestrians. Whether or not marked crosswalks are installed, it is important to consider other pedestrian facility enhancements (e.g., raised median, traffic signal, roadway narrowing, enhanced overhead lighting, traffic-calming measures, curb extensions), as needed, to improve the safety of the crossing. These are general recommendations; good engineering judgment should be used in individual cases for deciding where to install crosswalks.

** Where the speed limit exceeds 40 mi/h, marked crosswalks alone should not be used at unsignalized locations.

*** The raised median or crossing island must be at least 4 ft. wide and 6 ft. long to serve adequately as a refuge area for pedestrians, in accordance with MUTCD and AASHTO guidelines.

C = Candidate sites for marked crosswalks. Marked crosswalks must be installed carefully and selectively. Before installing new marked crosswalks, an engineering study is needed to determine whether the location is suitable for a marked crosswalk. For an engineering study, a site review may be sufficient at some

locations, while a more in-depth study of pedestrian volume, vehicle speed, sight distance, vehicle mix, and other factors may be needed at other sites. It is recommended that a minimum utilization of 20 pedestrian crossings per peak hour (or 15 or more elderly and/or child pedestrians) be confirmed at a location before placing a high priority on the installation of a marked crosswalk alone.

P = Possible increase in pedestrian crash risk may occur if crosswalks are added without other pedestrian facility enhancements. These locations should be closely monitored and enhanced with other pedestrian crossing improvements, if necessary, before adding a marked crosswalk.

N = Marked crosswalks alone are insufficient, since pedestrian crash risk may be increased by providing marked crosswalks alone. Consider using other treatments, such as traffic-calming treatments, traffic signals with pedestrian signals where warranted, or other substantial crossing improvement to improve crossing safety for pedestrians.

Adapted from Source: Safety Effects of Marked versus Unmarked Crosswalks at Uncontrolled Locations: Final Report and Recommended Guidelines, Table 11 FHWA, 2005

Table 3-3: Recommendations for Installing Midblock Crosswalks

MUTCD-compliant signing and pavement markings are to be provided to make the refuge island conspicuous to motorists. Overhead street lighting should also be considered. Median refuge islands typically have an open, flat cut and do not ramp up and down due to the short width. If the island is sufficiently large, then ramps that meet ADA requirements (8.3% maximum grade) can be used. It is best to provide a slight grade (1.5 percent or less) to permit water and silt to drain from the area. For roadway posted speeds above 40 mph/design speeds above 45 mph, clear zone criteria between the median and travel lane typically eliminates the applicability of median refuge islands. Recommended median design criteria includes:

- The desirable median width is at least eight (8) feet wide to allow the pedestrian to wait comfortably in the center, four (4) feet from moving traffic. A wider median is necessary if it must also serve the purpose of providing a left–turn bay for motor vehicle traffic at intersections.
- If the desired eight (8) feet cannot be achieved, a width of six (6) feet, or four (4) feet (minimum) will be sufficient. To provide the needed width, especially in a downtown or other commercial environment, consider narrowing travel lanes to an appropriate width (see *Table 3-3, Recommendations for Installing Midblock Crosswalks* for acceptable lane widths).
- Median island cut throughs shall be designed to have a minimum width of five (5) feet to ensure a passing space is provided.
- Detectable warning surfaces are to be separated by a minimum length of two (2) feet in the direction of pedestrian travel.
- Pedestrian access routes of shared-use paths through a median island must be a minimum of the same width as the shared-use path. The width of the island should be eight (8) feet to ensure a bicycle can fit within the island.
- Refuge islands must be raised and not simply a painted surface.

The placement of midblock signals is called for in some locations. The primary signalized treatment that should be considered at midblock or non-intersection crossings is the High intensity Activated crosswalk (HAWK) Pedestrian Hybrid Beacon:

- A HAWK Pedestrian Hybrid Beacon should be examined where the Pedestrians Per Hour (PPH) volume exceeds 20 and the 85th percentile motor vehicular speeds exceed 35 mph. When an engineering study finds that installation of a pedestrian hybrid beacon is justified, the following design guidelines should be met:
  - The pedestrian hybrid beacon should be installed at least 100 feet from side streets or driveways that are controlled by stop or yield signs.
  - Parking, landscaping, roadway alignment, and other sight obstructions can cause safety hazards for pedestrians. See Roadway Standard Drawing T-M-4A and 4B as well as RD11-SD-Series for design requirements.
  - The installation should include suitable standard signs and pavement markings.
  - If installed within a signal system, the pedestrian hybrid beacon should be coordinated.

3-408.00 CURB EXTENSIONS/BULB-OUTS

On streets with curb and on-street parking or shoulders, curb extensions can be used to extend the sidewalk or curb line into the shoulder or parking lane, which reduces the effective street width at the intersection. Curb extensions can:

- Reduce the crossing distance of pedestrians
- Improve the sight distance and sight lines for both pedestrians and motorists
- Create adequate space for curb ramps and landings where the existing sidewalk space is narrow
- Provide additional storage space for pedestrians waiting to cross
- Prevent parked cars from encroaching into the crosswalk area

In general, curb extensions should extend the width of the shoulder or parking lane, with the face of curb approximately one (1) foot from the edge line of the through travel lane. Curb extensions may not be needed or desirable on every leg of an intersection if the street leg is narrow, parking is not permitted, or the curb extension would interfere with a bicycle lane or the ability of the design vehicle to negotiate a right turn. Storm drainage from the street must also be considered by the Designer to ensure ponding does not occur. Low-level landscaping that does not conflict with sight distance or intersection sight triangle requirements is recommended on curb extensions to provide alignment cues for pedestrians with vision impairments and to increase the visibility of the extension to approaching motorists. Curb extensions are not typically appropriate at high-speed rural intersections or where channelized right turns are warranted.

3-409.00 PEDESTRIAN, BICYCLE, CONSIDERATIONS FOR ROUNDABOUTS

The number of conflict points between vehicles, pedestrians, and cyclists is reduced when a roundabout is used for intersection control. Since single lane roundabout will not have signalization to offer pedestrian phases or does not require vehicles to make a complete stop,

other measures must be designed to ensure drivers and multimodal users are clearly able to see each other. Proper roundabout design should produce the reduced vehicle speeds that are needed for vehicles to yield the right of way to crosswalk users. Multi lane urban roundabouts with sidewalk facilities at both sides requires a pedestrian push-buttons with RFRB to improve safety of users.

Crosswalk and/or bicycle facilities must be included at roundabouts in locations with existing pedestrian or bicycle infrastructure or that are connected to or planned to be connected to pedestrian or bicycle networks. At rural or urban locations where current pedestrian and bicycle traffic is not significant, the plans may include measures to accommodate future needs or demands. These may include:

- Rough grading the perimeter of the roundabout to accommodate future sidewalks, landscaping buffer strip, shared-use paths, etc.
- Installing pedestrian and bicycle curb ramps or lowered curb at logical “future” locations along perimeter curbing
- Providing cut-throughs (gaps) at the splitter islands for future crosswalks
- Obtaining adequate right-of-way to accommodate future measures, including lighting
- Installing conduit across all legs and splitter islands in the event that roadway lighting or accessible pedestrian beacons or signals are required

Sidewalk facilities at roundabouts should be designed following Section 4- Accessible Pedestrian Travel and TDOT standards; supplementary guidance for sidewalks that function as a shared path to carry bicycle traffic around a roundabout are discussed in Chapter 3-409.03.

3-409.01 CROSSWALK FACILITIES

Since a goal of any roundabout is to result in low and consistent speeds being maintained throughout the intersection, a properly designed roundabout will reduce the risk of vehicle-pedestrian collisions due to the slow speeds expected. In addition to speed control elements such as Entry Deflection and corresponding Fastest Path checks, there are design elements that may be beneficial to pedestrian safety when designing the crosswalks at a roundabout, most prominently the inclusion of median refuge islands (MM-CR-4) and reduction in vehicle speeds at the crosswalk compared to a free-flowing mainline at a side-street stop intersection or at a traffic signal during the green phase. The following general design criteria should be considered for crosswalks at roundabouts:

- Minimized crossing distance to reduce pedestrian exposure to traffic.
- Crosswalks should be designed to provide pedestrians a straight walking path across the traffic lanes (90 degrees to traffic flow preferred to minimize crossing distance), including any right-turn bypass lanes.
    - When a splitter island is provided, a Designer may need to “bend” crosswalk alignments at the splitter island to provide 90-degree crossings at the entrance and exit lane.
    - The exception to this guidance is when adequate pedestrian refuge is not provided within the splitter island, such as at a mini-roundabout. In these cases,

the crosswalk should proceed straight, crossing both lanes in one movement, and follow the shortest path across the roadway. In situations where the splitter island does not provide adequate refuge area, detectable warning surfaces should not be provided in the median.

- To minimize out-of-direction travel for pedestrians, crosswalks should be located as close as possible to the intersection while still maintaining required queue space for vehicles.
- Crosswalks should typically be located one vehicle length (approximately 20 feet minimum) behind the yield point, namely the wide dotted white line tangent to the ICD (Standard Drawing MM-CR-4A); this gives the driver at the yield line the ability to concentrate on entering the roundabout since they will have already traversed the crosswalk conflict point.
- Splitter islands should have a minimum width sufficient to provide an adequate pedestrian refuge area, as shown on Standard Drawing MM-CR-4A.
- The finished grade of the pedestrian crossing (refuge) areas within the splitter islands must be graded at a smooth slope which provides positive drainage in a manner that is compliant with pedestrian accessibility standards. The Designer should avoid elevating the refuge area except the minimal amount needed for proper drainage.

The design criteria noted above are illustrated on Standard Drawing MM-CR-4A, “Standard Construction Details for Roundabouts”. The general Standard Drawings for curb ramps provide details for ramps at the exterior curb cuts for crosswalks.

The Designer should note that additional design elements and crosswalk infrastructure may be necessary at roundabouts where accessible pedestrian crossings are required, as discussed in Chapter 3-409.02.

3-409.02 ACCESSIBLE PEDESTRIAN CROSSINGS

Care should be taken in the design of splitter island pedestrian refuge areas to ensure that visually impaired pedestrians are guided to and properly aligned with the second crosswalk of a two-stage crossing. Standard Drawing MM-CR-4A provides a detail of pedestrian refuge areas at splitter islands.

Supplementary guidance for Designers on accessible pedestrian infrastructure at roundabouts can be found in Section 4.1 of NCHRP Research Report 834, *Crossing Solutions at Roundabouts and Channelized Turn Lanes for Pedestrians with Disabilities* (NCHRP, 2016).

Crosswalks at roundabouts can present risks for visually impaired pedestrians due to the uncertainty over gap detection and determining whether a driver will yield to pedestrian traffic. Where an accessible pedestrian crossing is required at a roundabout crosswalk, the Designer should assess whether a pedestrian traffic control device is appropriate to notify approaching drivers that a pedestrian is present and provide audible feedback to the pedestrian.

NCHRP Research Report 834, *Crossing Solutions at Roundabouts and Channelized Turn Lanes for Pedestrians with Disabilities* (NCHRP, 2016), provides guidance on appropriate pedestrian traffic control devices for accessible crosswalks and builds upon the *Proposed Public*

Right-of-Way Accessibility Guidelines, or PROWAG (U.S. Access Board, 2011), which has been adopted by TDOT. According to these sources, pedestrian traffic control devices should be considered for crosswalks at multi-lane roundabout approaches. Crosswalks at single-lane roundabout entries and exits generally do not require advanced pedestrian accommodations beyond the provision of accessible crosswalk design and markings unless there are site-specific factors that merit the consideration of a pedestrian traffic control device, such as entry or exit speeds (*V1*, *V3*, *V4*, or *V5* per Section 2-1004.01) in excess of 30 mph.

Per NCHRP Research Report 834 and the associated FHWA Technical Report FHWA-SA-15-069, *Evaluation of Rectangular Rapid-Flashing Beacons at Multilane Roundabouts* (FHWA, 2015), the following pedestrian traffic control devices should be considered for installation at multi-lane roundabout approaches, listed from greatest to least impact:

- Pedestrian Signal
- Pedestrian Hybrid Beacon (PHB), also known as a High-Intensity Activated Crosswalk (HAWK) Beacon
- Rectangular Rapid-Flashing Beacon (RRFB)
- Raised Crosswalk

Recommended thresholds for Designers to consider the installation of a pedestrian traffic control device at a roundabout crosswalk are provided in *Figure 3-7, Recommended Pedestrian Traffic Control Device Treatments at Roundabouts.*

Raised Crosswalks may be considered in combination with RRFB or Pedestrian Signal/PHB traffic control if additional visibility and/or speed control is needed. Where used, the impacts of raised crosswalks on the approach/departure capacity should be assessed to verify that the selected roundabout laneage can handle the expected traffic volumes with raised crosswalks in place. Raised Crosswalks may not be desirable on some roadways, particularly those serve to truck traffic or emergency vehicle (fire truck or ambulance).

It should be noted that in high-noise environments, visually impaired pedestrians may not be able to distinguish between traffic at the crosswalk and background traffic or other conflicting noise. In these situations, the Designer should consider implementing a more impactful pedestrian traffic control device such as a pedestrian signal or PHB to ensure that vehicles stop for pedestrians and visually impaired pedestrians do not need to rely on listening for gaps in traffic.

Supplementary guidance for Designers on pedestrian traffic control devices for accessible crossings at roundabouts can be found in Section 4.2 of NCHRP Research Report 834, *Crossing Solutions at Roundabouts and Channelized Turn Lanes for Pedestrians with Disabilities* (NCHRP, 2016).

Single-Lane Entries and Exits

Treatment Selection:
Accessible Crosswalk Design and Crosswalk Pavement Markings Only

Note: In addition, consider using to Raised Crosswalk or RRFB treatment where entry/exit speeds exceed 30 mph)

Two - Lane Entries and Exits

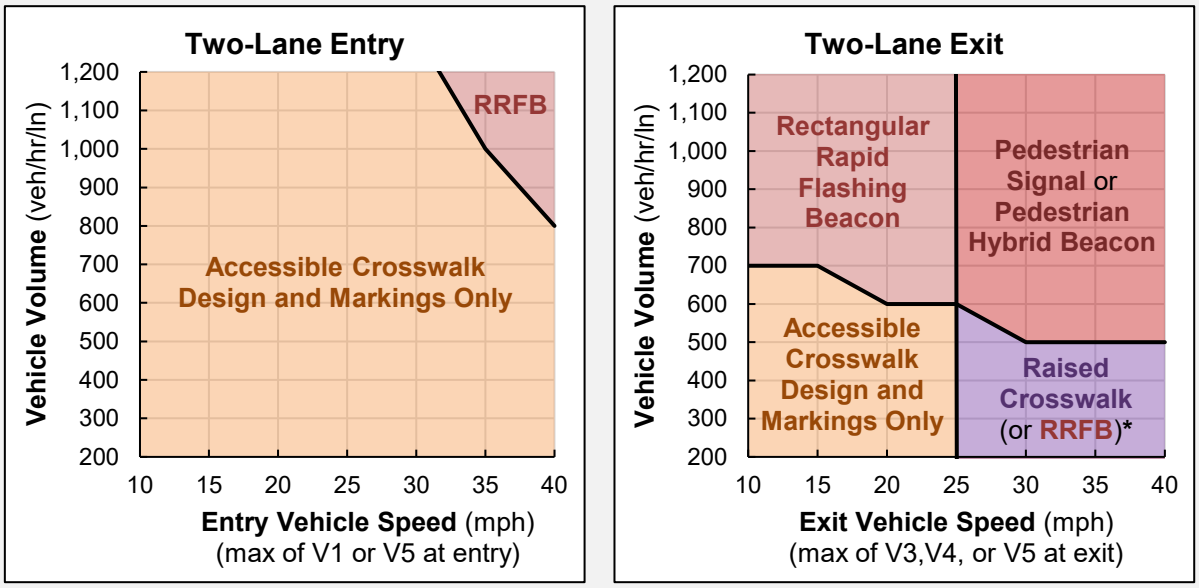

Treatment Selection: The Designer should select the appropriate treatment indicated on either the entry or exit when needed in addition to **Accessible Design & Markings.** The guidance provided above may conflict with PROWAG section R306.3 which requires to have pedestrian signals at all multilane roundabouts. Designers should follow the above guidance.

Figure 3-7 – Recommended Pedestrian Traffic Control Device Treatments at Roundabouts

Adapted from: *Guidelines for the Planning and Design of Roundabouts* (MassDOT, 2020)

If a pedestrian traffic control signal or beacon is appropriate at an accessible pedestrian crossing, pushbutton-activated audible warnings should be provided to accompany the signal or beacon since visually impaired pedestrians generally rely on audio cues more than other pedestrians. Supplementary guidance on pushbutton design and audible warnings at pedestrian signals or beacons is included in Section 3-410.00 and Chapter 13 of the TDOT *Traffic Design Manual*.

Per FHWA-SA-15-069, *Evaluation of Rectangular Rapid-Flashing Beacons at Multilane Roundabouts* (FHWA, 2015), the audible warning message accompanying a RRFB should be "yellow lights are flashing" to accurately convey the nature of the visual beacon and avoid giving visually impaired pedestrians a false sense that vehicles will stop, despite the fact that pedestrians have the right of way at roundabouts.

3-409.03 BICYCLE FACILITIES

Consideration shall be given to integrating bicycle facilities into new construction and reconstruction of roadway projects as appropriate for the context and function of the transportation facility.

Bicyclists should be given a choice when approaching a roundabout of either going through the roundabout and mixing with the vehicles in the circulatory roadway or exiting the roadway prior to entering the roundabout and continuing around the roundabout on a shared-use path with pedestrians. For optimal safety, bicyclists should be provided with shared-use paths, typically in the form of a sidewalk, around the perimeter of the roundabout, although it should be noted that cyclists are legally allowed to choose to remain in the roadway where shared-use paths are provided.

A shared-use path adjacent to the roundabout should be a minimum of 10 feet wide to accommodate bicycle and pedestrian use. If the provided path is less than 8 feet in width, the path would be classified as a sidewalk and cyclists should be directed to dismount. Unless instructed otherwise by TDOT, the Designer should provide bicycle lane exit ramps on each approach for exiting the roadway to the shared-use path, and then bicycle lane entrance ramps for re-entering the roadway, bicycle lane, or roadway shoulder on the far side of the roundabout.

For locations with on-street bicycle facilities, such as urban areas with delineated bike lanes or rural locations where a roadway shoulder is being used for a bike route, the shoulder or bike lane must not continue through the roundabout. The bicycle facility must terminate prior to the roundabout and a bicycle lane exit ramp should be provided to allow cyclists the option of exiting the roadway to a multi-use path around the roundabout or remaining on the roadway. Riders choosing to continue through the roundabout will be required to merge with vehicular traffic in both position and speed.

Where a bicycle lane exit ramp (the ramp the bicyclist uses to exit the roadway prior to the roundabout) is provided, the ramp should be located at least 100 feet prior to the yield point, (Standard Drawing MM-CR-4A). A minimum of 50 feet after a pedestrian crosswalk, the bicycle lane entrance ramp should be provided to reenter the roadway downstream of the roundabout. A bicycle lane exit ramp detail is included in Standard Drawing MM-CR-4A.

If the roundabout is being designed at a location where there is a designated shared-use path, the design should include those geometric features detailed on Standard Drawing MM-TS-3. To minimize confusion between bicycle lane ramps and pedestrian ramps, bicycle ramps should be as physically distinct from pedestrian ramps in location and geometry as possible. Detectable warning surfaces should be placed at the top of the bicycle ramps rather than at the bottom as is the practice with pedestrian ramps.

Additionally, the Designer should refer to the latest version of the AASHTO Guide for the Development of Bicycle Facilities.

3-410.00 PEDESTRIAN ACCOMMODATION AT SIGNALIZED INTERSECTIONS

When designing pedestrian signals, consider the needs of all pedestrians, including older pedestrians and pedestrians with disabilities who might walk at a significantly slower pace than the average pedestrian. Determine whether there are pedestrian generators in the project vicinity that might attract older people and pedestrians with disabilities and adjust signal timing accordingly.

If pedestrian pushbuttons are used, they should be capable of easy activation and conveniently located near each end of the crosswalks. Pedestrian pushbuttons should be located to meet all the following criteria (see *Figure 3-8, Pedestrian Pushbutton Location Detail):*

- Unobstructed and adjacent to a level all-weather surface to provide access from a wheelchair with maximum 1.5% slope in all directions
- Where there is an all-weather surface, a wheelchair accessible route from the pushbutton to the ramp
- Between the edge of the crosswalk line (extended) farthest from the center of the intersection and the side of a curb ramp (if present), but not greater than five (5) feet from said crosswalk line
- Between 1.5ft and 10ft of the curb or shoulder line unless ramp is longer than 10ft
- With the face of the pushbutton parallel to the crosswalk to be used
- Reach Range: Pushbutton shall be located within 10 inches of clear ground space
- At a mounting height of approximately 3.5 feet, but no more than four (4) feet, above the sidewalk
- Placed in such location as not to reduce the pedestrian route below 4ft of horizontal clearance. Consider dimensions of pushbutton foundation width in design.

Where there are physical constraints that make it impractical to place the pedestrian pushbutton adjacent to a level all-weather surface, the surface should be as level as feasible.

See the TDOT Traffic Design Manual for determining the effective crosswalk length for pedestrian signal design.

Where there are physical constraints that make it impractical to place the pedestrian pushbutton between 1.5 and six (6) feet from the edge of the curb, shoulder, or pavement, it should not be farther than 10 feet from the edge of curb, shoulder, or pavement.

Where two pedestrian pushbuttons are provided on the same corner of a signalized location, the pushbuttons should be separated by a distance of at least 10 feet. However, where there are physical constraints on a corner that make it impractical to provide the 10-foot separation between the two (2) pedestrian pushbuttons, the pushbuttons may be placed closer together or on the same pole.

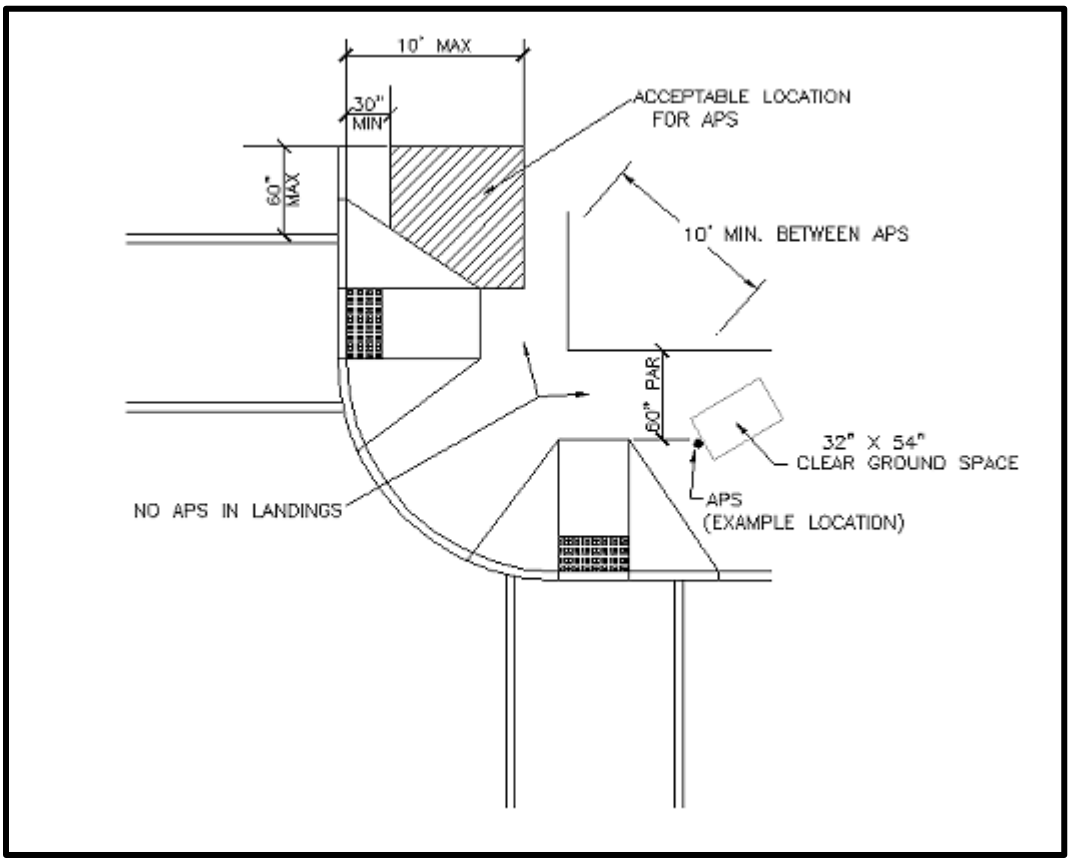

Figure 3-8: Pedestrian Pushbutton Location Detail
Source: PROWAG 2011 Edition Figure X02.5 A

APS - At all locations where pedestrian signals are newly installed, replaced, or significantly modified, the installation of accessible pedestrian signals (APS) and countdown pedestrian displays is required. When APS and countdown pedestrian display improvements are made, they are to be made for all locations associated with the system being improved. APS includes audible and vibrotactile indications of the WALK interval. Installation of these devices may require improvements to existing sidewalks and curb ramps to ensure ADA compliance. APS includes:

- APS pushbuttons shall have a locator tone that operates during the DON'T WALK and the flashing DON'T WALK intervals only
- APS pushbuttons must have both audible and vibrotactile indications of the WALK interval
- APS pushbutton controls and signs shall be installed facing the intersection and be parallel to the crosswalk served
- An APS pushbutton shall have a tactile arrow that indicates the crossing direction activated by the pushbutton

- An APS pushbutton provides high contrast (light-on-dark or dark-on-light) against its background
- If extended pushbutton press features are available, the APS pushbutton shall be marked with three braille dots forming an equilateral triangle in the center of the pushbutton
- If additional crossing time is provided by an extended pushbutton press feature, then an R10-32P (MUTCD) plaque shall be mounted adjacent to or integral with the APS pushbutton
- If the pedestrian clearance time is sufficient only to cross from the curb or shoulder to a median to wait for the next cycle, then an additional APS pushbutton shall be provided in the median
- The desirable spacing between the APS pushbuttons is 10 feet minimum (5 feet minimum spacing on medians and islands), if feasible
- If the spacing between the APS pushbuttons is 10 feet or greater, the audible WALK indication shall be a percussive tone
- If the spacing between the APS pushbuttons is less than 10 feet, the audible WALK indication shall be a speech walk message, and a speech pushbutton information message shall be provided

Refer to the MUTCD for further design guidance.

3-411.00 PEDESTRIAN TREATMENTS AT RAILROAD CROSSINGS

The design of pedestrian facilities that cross railroad tracks often presents challenges due to the conflicting needs of pedestrians and trains. Whenever practicable, align pedestrian crossings perpendicular to the tracks. Crossing surfaces may be constructed of timber planking, rubberized materials, or concrete. Concrete materials generally provide the smoothest and most durable crossing surfaces. When detectable warning surfaces are used at railroad crossings, place them per the MUTCD stop line placement criteria.

3-412.00 BARRIERS AND RAILINGS FOR PEDESTRIAN FACILITIES

When safety rails are needed to protect a pedestrian or bicyclist from steep slopes, drop-offs, or other non-vehicular hazards along a sidewalk or shared-use path, Roadway Standard Drawing MM-BPR-1 or MM-BPR-2 should be referenced.

3-413.00 SIGHT DISTANCE TRIANGLES

The visibility of all users is to be evaluated at intersections. Vehicle operators and bicyclists need to be able to see crossing pedestrians, and pedestrians need to be able to see both motor vehicles and bicyclists. Identifying sight triangles can help determine the optimal configuration of

pedestrian crossings. See the Roadway Standard Drawing RD11-SD-Series for determining sight distance at an intersection.

Visibility is impacted by both speed and the configuration of the intersection. There are multiple benefits in multimodal intersection configurations to proactively manage motorized vehicle speeds at intersection locations. The primary objective at intersections and interchanges is to create a clear, distinct, and predictable travel path for all users through the intersection.

3-414.00 INTERCHANGE CONSIDERATIONS

Crossing pedestrian facilities through an interchange functional area has a greater potential for conflict because of higher travel speeds, possibly higher volumes, and more complex lane configurations. Interchange crossings designed in a manner like intersection crossings are more compatible to pedestrians. For new construction projects where pedestrian (and bicyclist) activity are expected to be high, the Designer should consider an interchange configuration that is more accommodating to these users. These types include diamond interchanges and partial cloverleaf (Parclo) interchanges that do not have free flow turn lanes on the arterial. Examples are shown in *Figure 3-9, Pedestrian and Bicyclist Accessible Interchange Configurations*. If a diverging diamond interchange configuration is selected, current guidance recommends placing pedestrians and bicyclists in the median between the ramps.

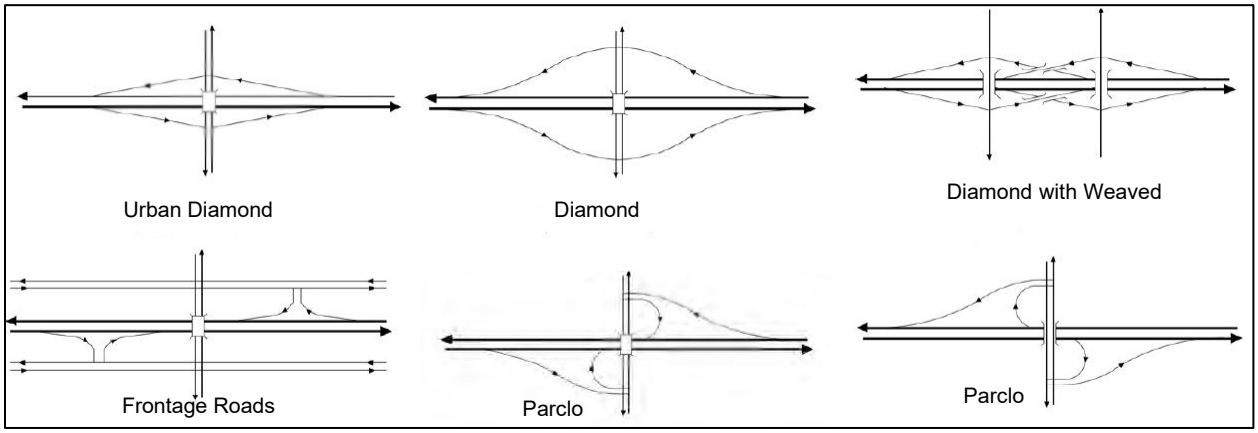

Figure 3-9: Pedestrian and Bicyclist Accessible Interchange Configurations

Examples of interchange configurations that are more difficult to accommodate pedestrians and bicyclists include trumpet interchanges, partial and full cloverleaf interchanges with free flow turn lanes, and single point interchanges (SPUI). Examples are shown in *Figure 3-10, Pedestrian and Bicyclist Challenging Interchange Configurations*.

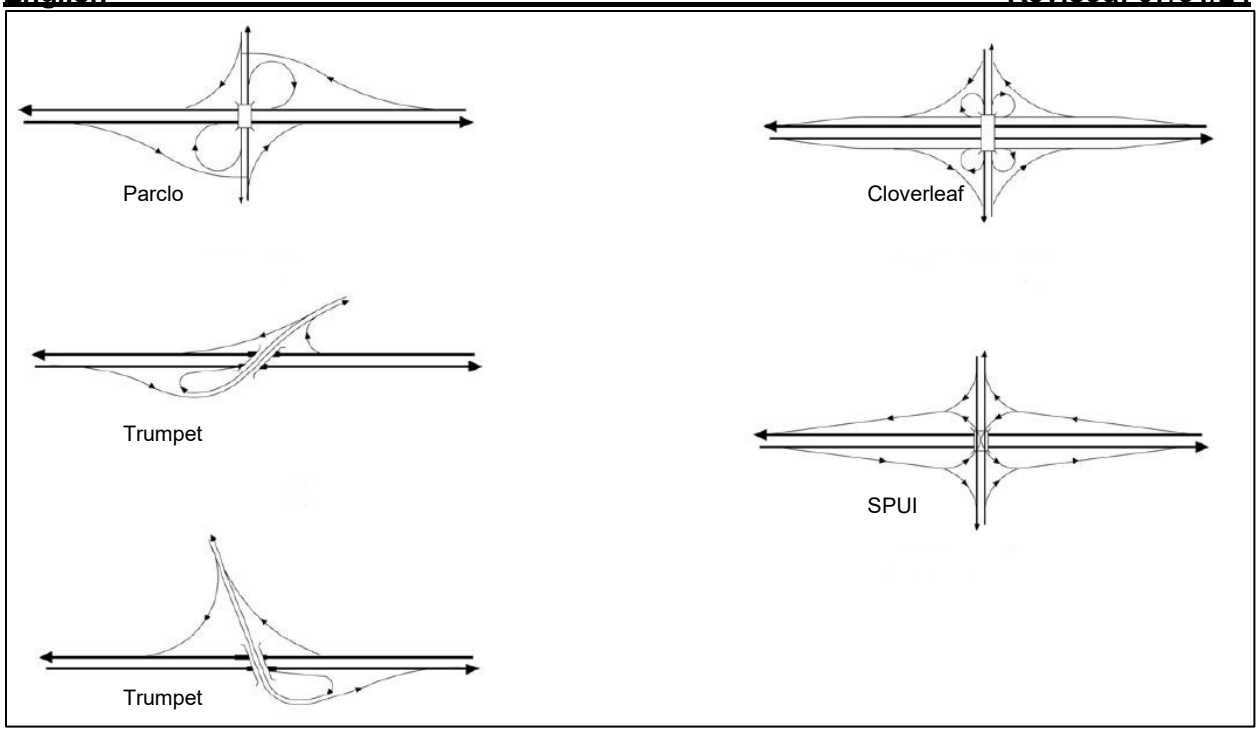

Figure 3-10: Pedestrian and Bicyclist Challenging Interchange Configurations

Figure 3-11, Interchange Ramps illustrates options for pedestrian facilities design through an interchange functional area. The preferred configuration for improved pedestrian safety in an interchange will not provide the motor vehicle free right turn and will realign ramps to intersect perpendicular to the crossroad (see off-ramp terminal in *Figure 3-11, Interchange Ramps*). However, given the modal priorities and operational performance needs of those priorities, this configuration may not always be practicable. In some cases, it is possible to align the pedestrian facility to cross an off-ramp with a more direct path for the crossing.

Consider the inclusion of a refuge island when there are multiple travel lanes. This configuration may also require additional speed management, signing, or pavement marking treatments on the ramp.

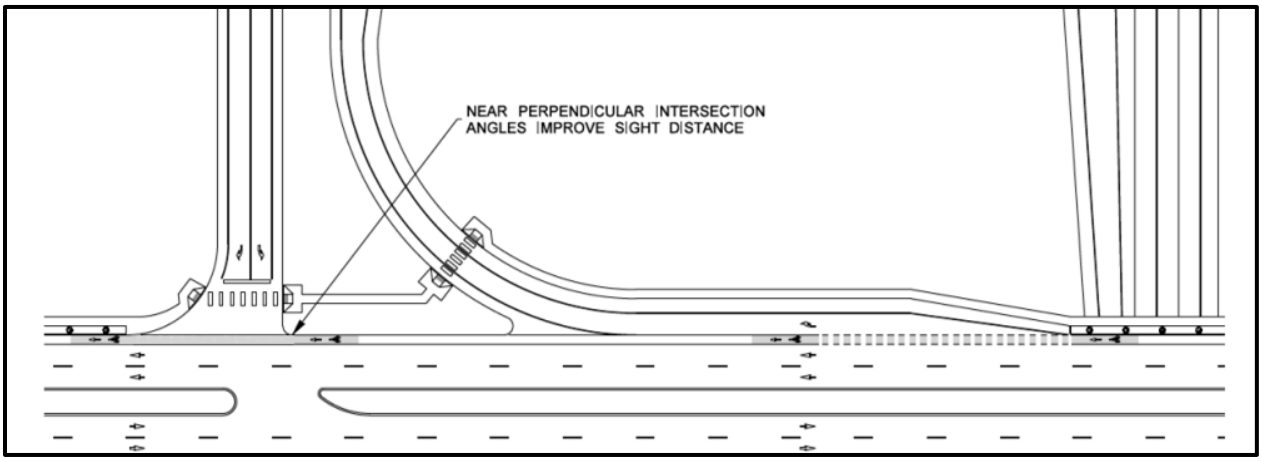

Figure 3-11: Interchange Ramps

3-415.00 BRIDGE CONSIDERATIONS

Bridge projects can be used to make critical new connections in pedestrian networks. In some locations, a truly cohesive network may only exist with bridge connections for non-motorized users. In others, a new bridge may provide a more direct route than the ones currently available. For bridges that already exist, improving both the safety and comfort of non-motorized users may require that the bridge be retrofitted with more appropriate, separated facilities.

Pedestrian accommodations should be provided on bridges whenever possible. Bridges should also accommodate pedestrian facilities traveling under them, so they do not create a barrier. Providing pedestrian accommodation during initial construction generally costs less than retrofitting later. Current design guidance generally provides adequate flexibility on how to best accommodate these users in bridge design projects.

3-416.00 ILLUMINATION AND SIGNING

Illumination of pedestrian crossings and other walkways is an important design consideration because lighting has a major impact on a pedestrian's sense of security. Illumination provided solely for vehicular traffic is not always effective in lighting parallel walkways for pedestrians.

Consider pedestrian-level (mounted at a lower level) lighting for pedestrian circulation paths, intersections, and other pedestrian crossing areas with high nighttime pedestrian activity, such as shopping districts, transit stops, schools, community centers, and other major pedestrian generators or areas with a history of pedestrian crashes.

3-417.00 WORK ZONE PEDESTRIAN ACCOMMODATION

The ADA requires that a public entity maintain its pedestrian facilities in operable working condition, including maintenance of their accessibility features. Construction and maintenance activities often temporarily disrupt these facilities. When this occurs, provide access and mobility for pedestrians through and around work zones. Address this in the temporary traffic control plans if the project occurs in a location accessible to pedestrians. The Designer must determine pedestrian needs in the proposed work zone during the public input process and through field visits. The Work Zone Design Manual should be utilized when addressing pedestrian accommodation.

Some work zone considerations include:

- Project phasing to keep a pedestrian route open at all times (one side of roadway at a time, or working on individual corners at intersections, etc.)
- Separate pedestrians from conflicts with work zone equipment and operations
- Separate pedestrians from traffic moving through or around the work zone
- Provide pedestrians with alternate routes that have accessible and convenient travel paths that duplicate, as closely as feasible, the characteristics of the existing pedestrian facilities

Provide walkways that are clearly marked and pedestrian barriers that are continuous, rigid, and detectable to vision-impaired persons who navigate with a cane. Also, keep:

- The pedestrian head space clear
- Walkways free from pedestrian hazards such as holes, debris, and abrupt changes in grade or terrain
- Access along sidewalks clear of obstructions such as construction traffic control signs
- A minimum clear width path throughout, four (4) feet for pedestrians or 10 feet for pedestrians and bicyclists

- Consider the use of flaggers if pedestrian generators such as schools are in the work zone vicinity. Consider spotters who are prepared to help pedestrians through the work zone.
- Provide for advance public notification of sidewalk closures in the contract special provisions and plans.
- Where transit stops are affected or relocated because of work activity, provide an accessible route to temporary transit stops.

Refer to *Roadway Design Guidelines* Chapter 4-712.00, MUTCD Chapter 6D "Pedestrian and Worker Safety", and TDOT *Work Zone Safety and Mobility Manual* for additional guidance.

3-418.00 PEDESTRIAN ACCESS TO TRANSIT STOPS

The location of transit stops is an important element in providing appropriate pedestrian facilities. Newly constructed transit stops must conform to ADA requirements. Locate and design newly constructed transit stops so that they are accessible from the sidewalk. A transit stop on one side of a street usually has a counterpart on the opposite side because transit routes normally function in both directions on the same roadway. Provide adequate crossing facilities for pedestrians. When locating a transit stop, consider transit ridership and land use demand for the stop. Also, consider compatibility with the following roadway/traffic characteristics:

- ADT
- Traffic speed
- Crossing distance
- Crash history
- Sight distance
- Connectivity to a pedestrian access route
- Traffic generator density

If any of these elements suggests an undesirable location for a pedestrian crossing, consider a controlled crossing or another location for the transit stop.

SECTION 5 – BICYCLE FACILITIES

3-500.00 GENERAL

This chapter is a guide for designing bicycle facilities within state highway right-of-way or for projects using state or federal-aid funds under TDOT's control. Guidance in this chapter includes options for intersection and interchange design. Unique design challenges are resolved using expertise and guidance from the Statewide Bicycle and Pedestrian Coordinator and others involved in the design process.

Bicycle facilities come in a variety of designs that vary by separation from motorized vehicular travel and other users. Except for on very low-speed, low-volume residential streets where pedestrians and bicyclists can comfortably share the roadway with motor vehicles, total physical separation is recommended to increase bicyclists' safety. This can be accomplished with shared-use paths and cycle tracks.

Proposed multimodal facilities must allow sufficient width to allow all users to adhere to the Tennessee Bicycle Laws contained in TCA 55-8-175, which covers expectations of cyclists as well as motor vehicles in regard to occupying public space and safely passing cyclists in a motor vehicle.

3-501.00 TYPES OF BICYCLE FACILITIES

TDOT has adopted the following types of bicycle facilities, generally considered from least protected to most protected from vehicle conflicts. Each is discussed in more detail in the sections that follow.

- On-street shared-use lanes
- Bicycles on shoulders
- Striped on-street bicycle lanes
- Buffered on-street bicycle lanes
- Separated bicycle lanes / cycle tracks
- Shared-use paths

3-501.01 ON-STREET SHARED-USE LANES

A shared lane is a combined motor vehicle and bicycle lane. Shared lanes are generally appropriate on local roads and streets, preferably with lower traffic volumes, and only with posted speed limits of 35 mph and below. Shared lanes employ pavement markings and signage to indicate the combined use. Shared lane markings (aka "sharrows") are pavement markings

specifically used to indicate a shared lane or intersection space. The position of the marking is detailed in Roadway Standard Drawing MM-PM-2.

The speed of cyclists can vary significantly between users and depends on the experience, fitness level of the user, bicycle technology, and roadway grade. If a shared lane is proposed on a hill, a conventional bicycle lane should be considered in the upgrade direction of travel allowing for slower bicycles to climb outside of motor vehicular operation.

3-501.02 BICYCLES ON SHOULDERS

Many rural state highways are used by bicyclists for commuting between cities or for recreation/touring. Providing and maintaining paved shoulders can significantly improve convenience and safety for both bicyclists and motorists along such routes.

Accommodating bicycle users on the shoulder is common on state highways, particularly on rural facilities with posted speeds of 40 mph and above. Shoulder improvements to facilitate bicycle travel include widening the shoulders, improving roadside maintenance (including periodic sweeping), and removing surface obstacles such as drain grates that are not compatible with bicycle tires. A four (4)-foot usable shoulder must be present when the Average Daily Traffic is 1,000 or more and the posted speed limit is 40 mph or above to designate a roadway as a bike route (with signage). If shoulder rumble strips are present, provide for at least four (4) feet of usable shoulder between the rumble strip and the outside edge of shoulder. If guardrail or other barrier is located adjacent to the shoulder, increase the dimension to five (5) feet of usable shoulder. Refer to *Chapter 3-502.00* for further guidance.

Accommodating bicycle use on shoulders is appropriate at many locations. Note, however, that bicycle-on-shoulder accommodations are not dedicated bicycle facilities, and bicycle users do not have the same operating privileges as with striped on-street bicycle lanes. In rural to suburban/urban transition areas, consider converting the shoulder to a protected buffered bicycle lane, both to encourage speed management of motor vehicle users through the transition and to establish a dedicated special-use lane for cyclists to tie into the local bicycle network.

3-501.03 STRIPED ON-STREET BICYCLE LANES

Conventional striped on-street bicycle lanes are at-grade, all-weather pavement and adjacent to motor vehicle traffic lanes. They are designated by a single six (6)-inch solid white stripe between the motor vehicle lane and bicycle lane and supplemented with signs. The following geometric design criteria for bicycle lanes are summarized below.

- Typical bicycle lane width (rideable surface) is five (5) feet on roadways with curb and gutter
- Minimum width is four (4) feet
- Maximum width is eight (8) feet, but should typically be buffered so that they are not mistaken for a motor vehicle or parking lane

- Along sections of roadway with curb and gutter, a usable width of four (4) feet measured from the longitudinal joint between the gutter and bicycle lane to the center of the bicycle lane pavement marking line is recommended; in areas where four (4) feet cannot be achieved due to constraints, the absolute minimum width is three (3) feet
- Buffered or separated bicycle lanes are preferred to non-buffered or non-separated lanes and required on facilities with speed limits above 40 mph
- Minimum bicycle lane width adjacent to on-street parking is five (5) feet unless there is a marked buffer between the bicycle lane and on-street parking. Bicycle lane widths of six (6) or seven (7) feet are preferred adjacent to on-street parking lanes. Where on-street parking is permitted, delineating the bicycle lane with two stripes, one on the street side and one on the parking side, is preferable to a single stripe
- For bicycle lanes four (4) to five (5) feet wide, an additional two (2)- to one (1)-foot offset (respectively) from the edge of the paved shoulder is required to vertical elements over six (6) inches in height (such as guardrail)
- Gutter seams, drainage inlets, and utility covers should be flush with the pavement and oriented to prevent conflicts with bicycle tires (perpendicular to direction of travel)
- Bicycle lanes on one-way streets should generally be on the right side of the traveled way and should always be provided on both legs of a one-way couplet. The bicycle lane may be placed on the left side of a one-way street if it decreases the number of conflicts (e.g., those caused by driveway openings, heavy bus traffic, or parking) and if bicyclists can safely and conveniently transition in and out of the bicycle lane. If sufficient width exists, the bicycle lanes can be striped on both sides of a one-way street
- Where on-street parking is provided, bicycle lanes are generally striped on the left side of the parking lane

Refer to *Figure 3-12, Striped On-Street Bicycle Dimensions* and *Chapter 3-502.00* for further guidance. Additionally, Roadway Standard Drawings MM-PM-2 through MM-PM-5 should be referenced concerning signing and pavement markings for bicycle lanes. Any deviation from these Standard Drawings requires approval by the TDOT Roadway Design Division. Refer to *Chapter 3-908.00* for additional information concerning the Design Waiver process and forms.

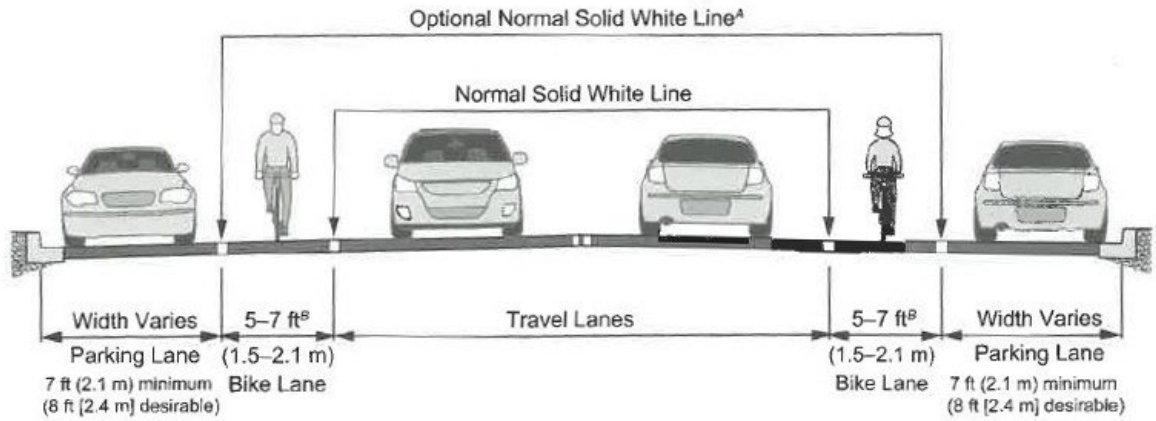

On Street Parking

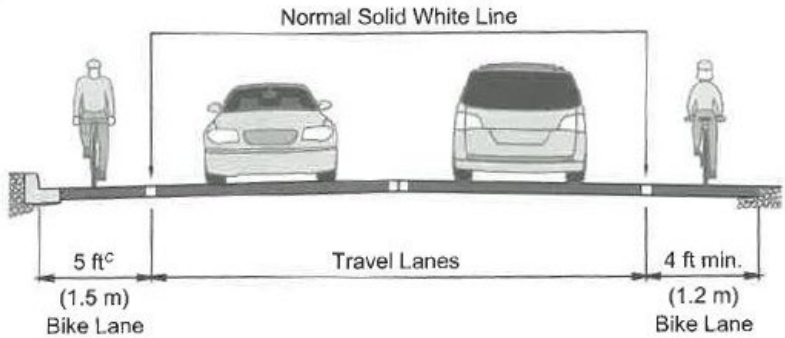

Parking Prohibited

Notes:

A An optional normal (4–6-in./100–150-mm) solid white line may be helpful even when no parking stalls are marked (because parking is light), to make the presence of a bicycle lane more evident. Parking stall markings may also be used.

B Bike lanes up to 7 ft (2.1 m) in width may be considered adjacent to narrow parking lanes with high turnover.

C On extremely constrained, low-speed roadways (45 mph [70 km/h] or less) with curbs but no gutter, where the preferred bike lane width cannot be achieved despite narrowing all other travel lanes to their minimum widths, a 4-ft (1.2-m) wide bike lane can be used.

Source: AASHTO Guide for the Development of Bicycle Facilities, 4th Edition

Figure 3-12: Striped On-Street Bicycle Dimensions

3-501.04 BUFFERED ON-STREET BICYCLE LANES

Buffered bicycle lanes are conventional bicycle lanes paired with a designated buffer space separating the bicycle lane from the adjacent motor vehicle travel lane and/or parking lane. The buffer space is created with pavement markings. When a buffer is placed between the traveled way and a bicycle lane, it improves safety by separating bicyclists from moving motor vehicles. A buffer can also be placed between on-street parking lanes and bicycle lanes. When that configuration is selected, bicyclists have less risk of being hit by a car door being opened from a parked car. Both locations are acceptable, and the preferred placement of the buffer(s)

depends upon local conditions. Buffered bicycle lanes provide the following advantages when compared to conventional bicycle lanes.

- Provide greater distance between bicyclists and motor vehicles
- Provide space for faster moving bicyclists to pass slower moving bicyclists without having to encroach into the motor vehicle travel lane
- Provide a greater space for bicycling without making the bicycle lane appear so wide that it might be mistaken for a travel lane or a parking lane
- Appeal to a wider range of bicyclists and encourages bicycling

3-501.05 SEPARATED BICYCLE LANES / CYCLE TRACKS

Separated bicycle lanes, also referred to as a cycle track or protected bicycle lanes, include bicycle lanes, a buffer area, and some type of vertical feature that reduces the likelihood of encroachment into the bicycle lane by motor vehicles and increases user comfort. The most common type of vertical separator used within the buffer area is a pavement-mounted flexible tubular marker or delineator. Use of dual-faced curbing, raised medians, or the parking zone adjoining the buffer area can also accomplish the same task.

For added separation between bicyclists and motorists, the bicycle lanes can be curb separated and raised (not at-grade with the street). When a raised and curb-separated bicycle facility is provided, it is considered part of the street-side zone; however, it cannot be combined with other zone areas because the intent is also segregation from pedestrians. The raised and curb-separated facility is dedicated for bicycle users and delineated with pavement markings and signing. In instances of multiple driveway entrances occurring across an elevated/separated bicycle facility, the Designer should strive to keep the bicycle facility elevated across entrances to yield a better user experience for cyclists.

Dimensions for separated bicycle lanes should typically follow the guidance provided for other bicycle facilities noted in *Chapter 3 - Sections 5* and *Section 6*.

3-501.06 SHARED-USE PATH / SIDEPATH

Shared-use paths are designed for both transportation and recreational purposes and are used by pedestrians, bicyclists, skaters, and other users. Shared-use paths shall comply with all ADA standards. If a shared-use path is not serving the roadway, the running slope can be no greater than five (5) percent. Where a shared-use path is designed to parallel a roadway, the facility is a physical separation between the shared-use path users and the vehicular traveled way should be provided in accordance with this chapter.

As with any roadway project, shared-use path projects need to serve and fit into the context of multimodal activity along and across the corridor. When designing shared-use paths, the bicyclist may not be the critical design user for every element of design. For example, the crossing speeds of most intersections between roads and pathways should be designed for

pedestrians, as they are the slowest users. The design goal is to efficiently accommodate all intended users to minimize conflict potential between modes to the maximum extent possible.

Since shared-use paths serve both bicyclists and pedestrians, as well as other types of users, they are addressed separately in *Chapter 3 - Section 6.*

3-502.00 BICYCLE FACILITY SELECTION

Bicycle facility selection is influenced by the needs, range, connectivity, efficiency, and safety of cyclists. Roadway Standard Drawing MM-TS-1 provides the minimum bicycle accommodation guidance under various ADT volumes and posted speeds for rural and urban cross sections.

3-503.00 BICYCLES AT INTERSECTIONS

The principal objective when designing intersections for bicycle mobility and safety performance is to provide a visible, distinct, predictable, and clearly designated path leading to and through the intersection while managing potential conflicts between all other users and cyclists.

Several proven state-of-the-practice intersection treatments are presented within this section. However, pavement marking or aspects concerning the configuration may not currently be supported by the MUTCD. At the time of publication, bicycle boxes have received Interim Approval from FHWA and are allowed for use upon making the request to FHWA.

3-504.00 APPROACH THROUGH LANES

The approach to intersections needs to balance the bicycle user's safety needs with the mobility needs of other users. The conflict between right-turning vehicles and through bicyclists is a serious crash risk at many intersections. Clear delineation of user lanes and potential conflict areas is currently the treatment most commonly used to manage the approach to intersections. Dotted lines can be used to identify the conflict area. Colored pavement markings can be used to further enhance and delineate the conflict area. *Figure 3-13, Right Turn Movements Across Bicycle Lanes*, shows different applications of the approach through-lane marking treatment most likely to be encountered.

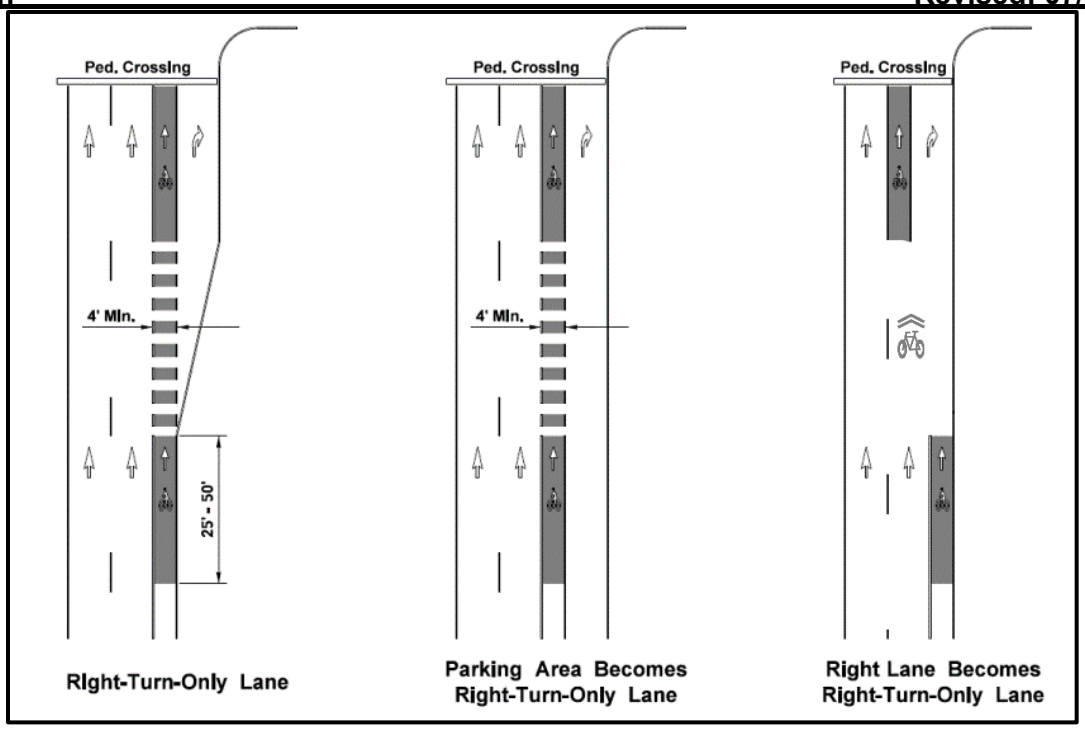

Figure 3-13: Right Turn Movements Across Bicycle Lanes

3-505.00 BICYCLE BOXES

Bicycle boxes are designated areas for bicyclists positioned across and in front of the bicycle and motor vehicle lanes as shown in *Figure 3-14, Typical Bicycle Box Application*. Bicycle boxes are used at signalized intersections and increase both mobility and safety performance for the bicycle mode. Applying a bicycle box assists mobility performance by prioritizing the bicycle movement at an intersection and enables a cyclist to more easily position for a left-turn movement. Bicycle boxes have also been found to prevent cyclist and motor vehicle encroachment into the pedestrian crossing, reducing conflicts with pedestrians at intersections. Bicycle safety performance is improved by increasing the visibility of the cyclist, and by reducing conflicts between motor vehicles making a right turn and the bicycle through movement (also known as "right-hook" conflict).

Bicycle boxes are not desirable on multi-lane streets. In situations where bicycle boxes are being considered across through and left-turn lanes, the bicycle box should extend across the entire intersection. The exception to this is if more than one left turn lane is present, then the bicycle box shall only extend across the right-most left-turn lane adjacent to the through lanes. Special accommodations should be made to allow the cyclists to potentially cross with a pedestrian movement to avoid cyclists crossing in front of through moving traffic during a phase change.

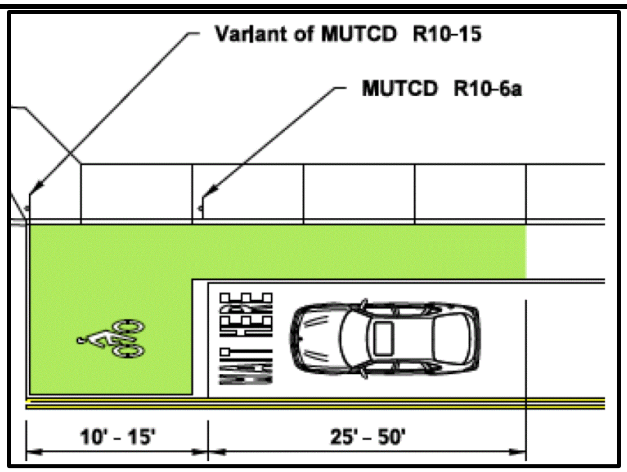

Figure 3-14: Typical Bicycle Box Application
Source: Washington State Department of Transportation, *Chapter 1520, Roadway Bicycle Facilities*

3-506.00 DRAINAGE GRATES / INLETS / JUNCTIONS

When drainage grates or manhole covers are in a bicycle lane, their effect on bicyclists can be minimized by providing three (3) feet of lateral clearance between the edge of a drainage inlet grate and the bicycle lane stripe. Grates and manhole covers should be installed and maintained level with the surface of the bicycle lane. Provide drainage inlet grates on bicycle facilities that have openings narrow enough and short enough that bicycle tires will not be caught by the grates. Replace existing grates that are not designed for bicycles with a TDOT-approved grate with an opening four (4) inches or less center to center and perpendicular to the direction of travel. Any grate that falls within the crosswalk must comply with ADA and the long dimension of the opening shall be perpendicular to the direction of the pedestrian travel.

Design considerations for usability of the bicycle lane should take into consideration the ability for cyclists to continue to utilize facilities during rain events with corresponding drainage gutter spreads.

3-507.00 PAVEMENT MARKINGS

All bicycle signing, marking, signalization and traffic control is governed by the MUTCD and TDOT Standards.

3-508.00 RAILROAD CROSSINGS

The design of bicycle facilities that cross railroad tracks often presents challenges due to the conflicting needs of bicyclists and trains. Whenever practicable, align bicycle crossings perpendicular to the tracks to minimize potential problems related to crossing the tracks (see *Figure 3-15, Bicycle/Railroad Crossings*). Crossing surfaces may be constructed of timber

planking, rubberized materials, or concrete. Concrete materials generally provide the smoothest and most durable crossing surfaces.

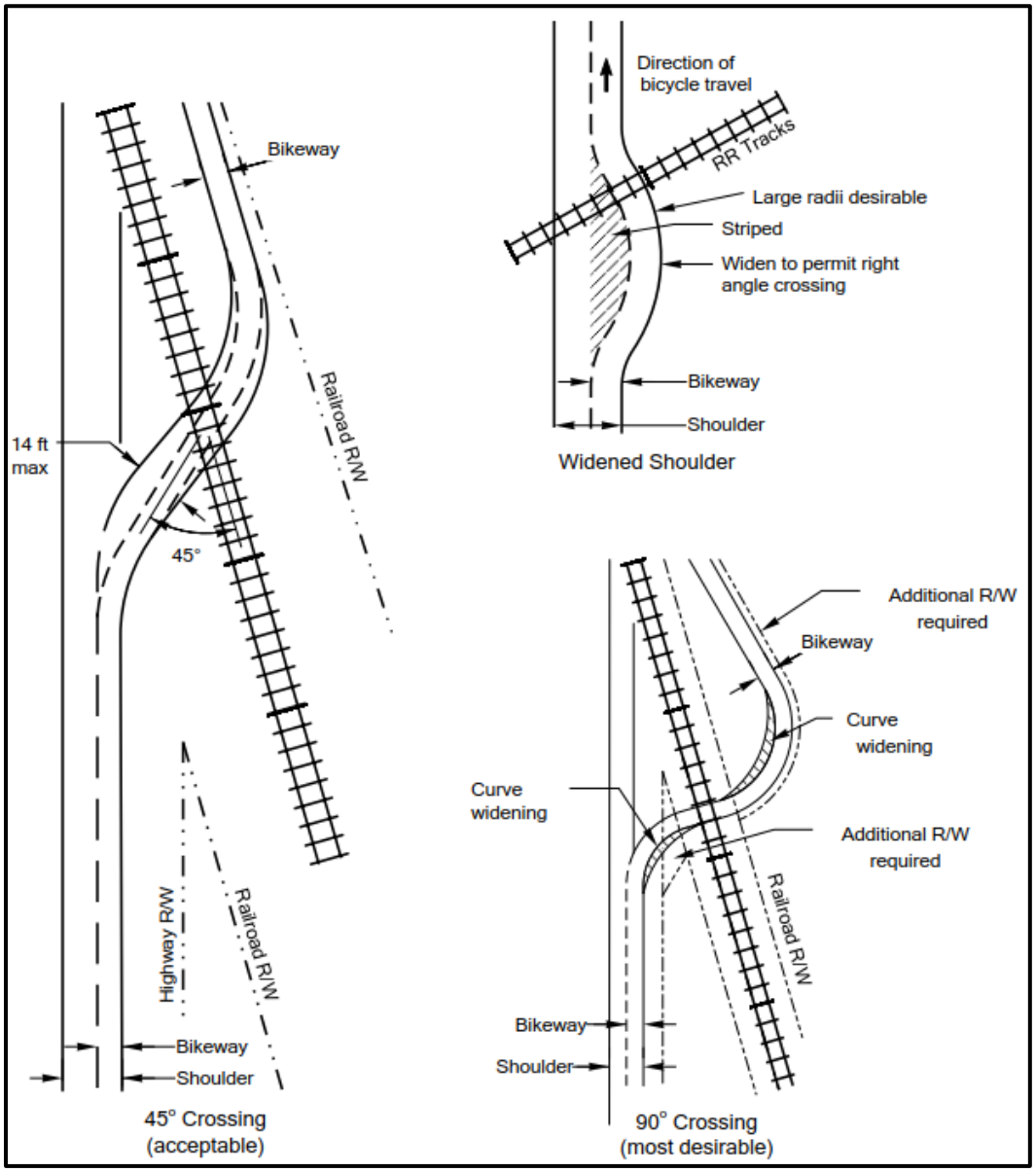

Figure 3-15: Bicycle / Railroad Crossings

Whenever a bicycle lane crosses railroad tracks, continue the crossing at least as wide as the bicycle lane. Wherever possible, design the crossing at right angles to the rails. Where a skew is unavoidable, widen the shoulder or bicycle lane to permit bicyclists to cross at right angles. See Roadway Standard Drawing MM-TM-1.

3-509.00 BRIDGE CONSIDERATIONS

Bridge projects can be used to make critical new connections in bicycle networks. In some locations, a truly cohesive network may only exist with bridge connections for alternate transportation. In others, a new bridge may provide a more direct route than the ones currently available. For bridges that already exist, improving both the safety and comfort of non-motorized users may require a bridge to be retrofitted with more appropriate, separated facilities.

Bridges should also accommodate bicycle facilities traveling under them, so they do not create a barrier. Providing bicycle accommodation during initial construction generally costs less than retrofitting later.

3-510.00 BARRIERS AND RAILINGS

When safety rails are needed to protect a bicyclist from steep slopes, drop-offs, or other non-vehicular hazards along a bicycle facility or shared-use path, Roadway Standard Drawing MM-BPR-1 should be referenced.

When the edge of the bicycle lane is within five (5) feet of a barrier or railing, provide a barrier height of 42 inches or more to reduce the potential for bicyclists to fall over the barrier (see *Figure 3-16 Barrier and Railing Application*). On a bridge or bridge approach where high-speed, high-angle impacts with a railing, fence, or barrier are more likely to occur (such as short radius curves with restricted sight distance or at the end of a long, descending grade) or in locations with site specific safety concerns, a higher, 48-inch or 54-inch railing should be considered. When the bicycle facility is adjacent to a barrier, consider a single slope barrier to mitigate for pedal movement conflicts. On structures, the bridge railing type and height are part of the structure design. Contact the TDOT Headquarters Bridge and Structures Office for additional information.

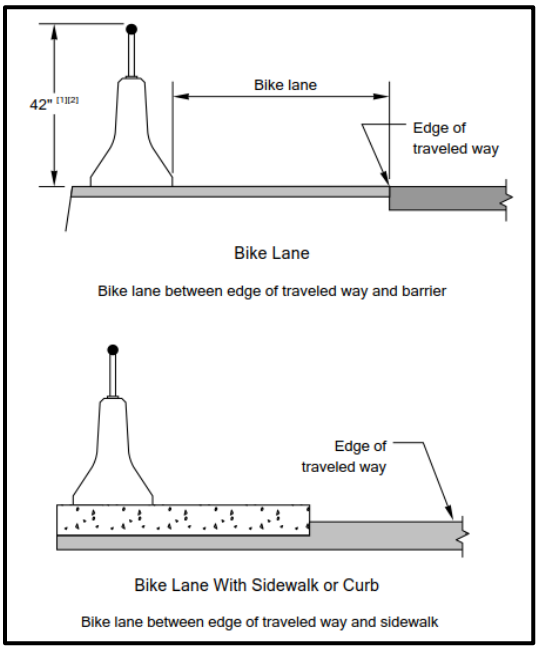

Figure 3-16: Barrier and Railing Application

3-511.00 SIGHT DISTANCE TRIANGLES

See *Chapter 3-413.00* for a discussion on sight distance triangles. The concepts are the same for pedestrian and bicycle facilities.

3-512.00 INTERCHANGE CONSIDERATIONS

See *Chapter 3-414.00* for a discussion on interchange considerations. Many of the concepts are the same for pedestrian and bicycle facilities. If the bicycle shifts onto the sidewalk cyclist must dismount

Additional pavement marking and separated path configurations for bicycle facilities through interchanges are provided in *Figure 3-17,Optional Separated Bicycle Facility Across Free-Flow Exit Ramp,* through *Figure 3-19, Separated Bicycle Facility Across Free-Flow Entrance Ramp.*

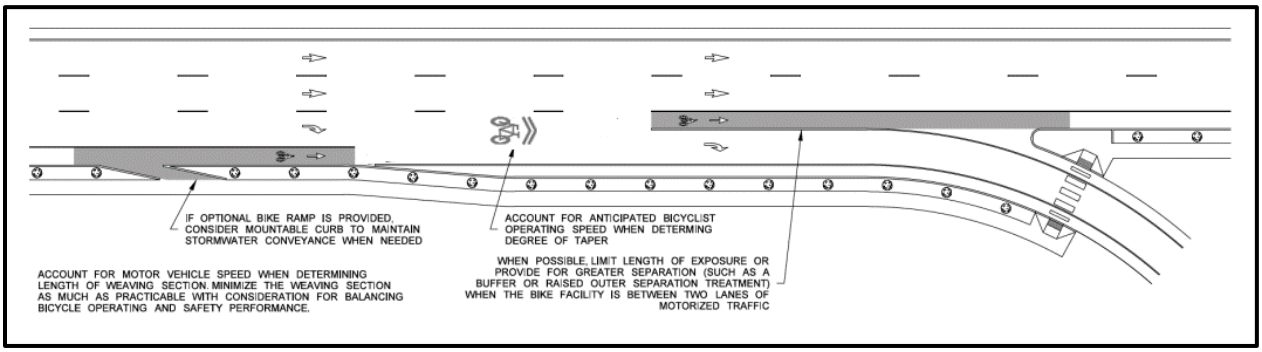

Figure 3-17: Optional Separated Bicycle Facility Across Free-Flow Exit Ramp

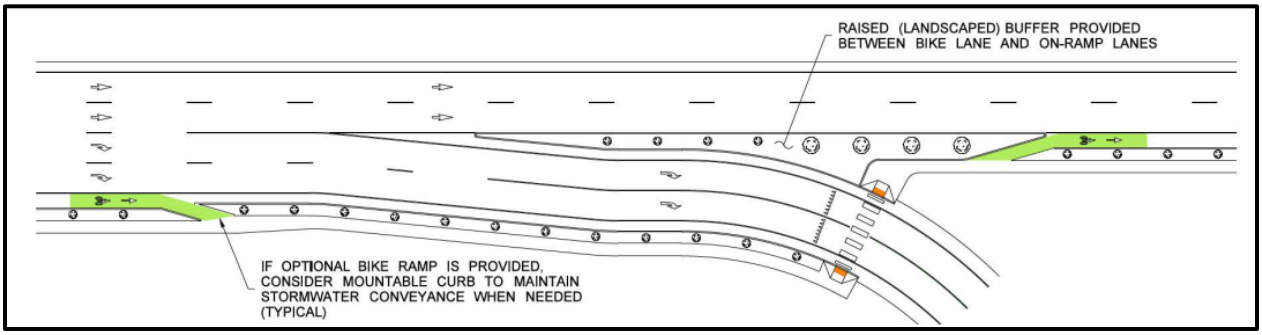

Figure 3-18: Non-Optional Separated Bicycle Facility Across Two-Lane Free-Flow Exit Ramp

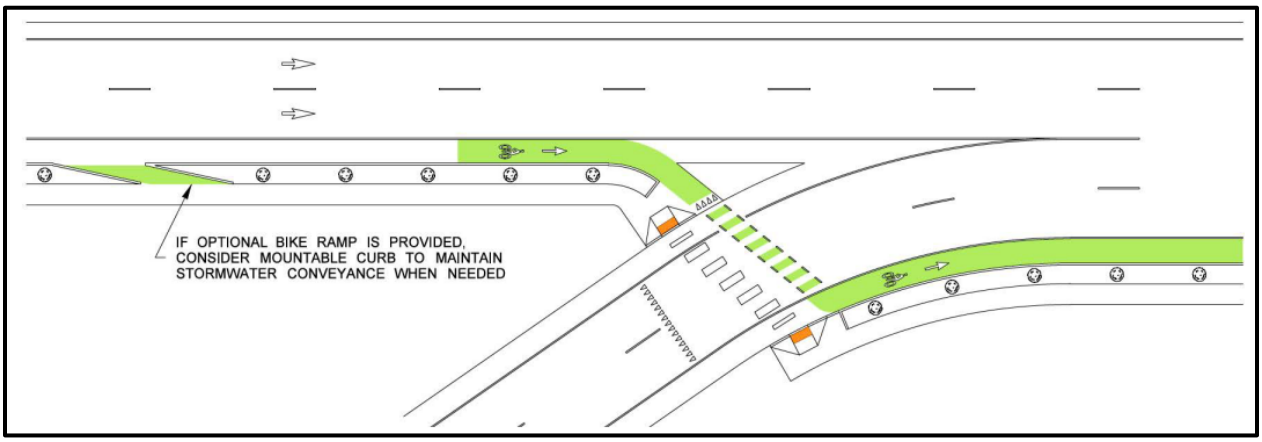

Figure 3-19: Separated Bicycle Facility Across Free-Flow Entrance Ramp

SECTION 6 – SHARED-USE PATHS

3-600.00 GENERAL

A shared-use path is a combined bikeway and pedestrian facility located within an independent right-of-way, or located within the street right-of-way, and physically separated from motor vehicle traffic by an open space or barrier.

Most shared-use paths are designated for two-way travel and are designed for both transportation and recreational purposes. Shared-use path design is similar to roadway design, but on a smaller scale and with lower design speeds. Shared-use paths shall comply to all ADA Standards. Shared-use paths are also to be used by pedestrians, skaters, and other non-motorized users and should be designed accordingly.

As with any roadway project, shared-use path projects need to serve and fit into the context of multimodal activity along and across the corridor. When designing shared-use paths, the bicyclist may not be the critical design user for every element of design. Shared-use paths have a maximum of five (5) percent running slope. The crossing speeds of most intersections between roads and pathways should be designed for pedestrians, as they are the slowest users. The design goal is to efficiently accommodate all intended users and minimize conflict potential between modes to the maximum extent possible. Additionally, when designing such facilities, wayfinding should be considered to ensure that all users have adequate information to direct them to their intended destinations.

3-601.00 DESIGN SPEED AND CAPACITY

The design speed for a shared-use path is based on the bicycle user and is dependent on the terrain and the expected conditions of use. The minimum design speed for shared-use paths is 18 mph. All design plan title sheets shall include proposed facility design speed and capacity.

3-602.00 GRADES

Where shared-use paths are contained within a roadway right-of-way, the grade shall not exceed the general grade established for the adjacent roadway. Where shared-use paths are not contained within a roadway right-of-way, the grade shall be five (5) percent maximum.

3-603.00 HORIZONTAL AND VERTICAL CURVES

Geometric design of horizontal curves, vertical curves, stopping sight distance, and horizontal sight distance shall generally follow the guidelines in the latest edition of the AASHTO Guide for the Development of Bicycle Facilities.

The minimum horizontal curve radius is 60 feet. At a location where a design waiver is granted for a curve with a radius less than 60 feet, a Curve or Turn Warning Sign shall be placed in advance of the curve (see MUTCD Chapter 9B for additional guidance).

When minimum radius curves cannot be obtained because of right-of-way, topographical, or other constraints, consider installing the following mitigation measures to slow bicyclists when approaching curves: intermittent curves to slow or maintain desired speeds, standard curve warning signs and supplemental pavement markings in accordance with the MUTCD, perpendicular stripes painted on the pathway in decreasing intervals to provide the perception of increased speed, and changes in pavement texture to encourage reductions in speed at tight curve approaches. The negative effects of tight radius curves can also be partially offset by widening the pavement through the curves. Shared-use paths shall not be super elevated in curves. A 1.5 percent cross slope shall be maintained. See Roadway Standard Drawing MM-TS-3.

3-604.00 PATH WIDTHS

The standard shared-use path width is 10 feet, with two (2)-foot clear zones on either side of the path. In constrained locations, the width can be reduced to eight (8) feet when severe constraints are present. However, it must be recognized that narrower widths will yield lower levels of service during peak hour use of the facility. A design waiver request must be made in order to utilize widths less than 10 feet. As part of the design waiver request, a level of service study demonstrating acceptable operations with the narrower widths may be required.

On bridges or in tunnels, it is common to pave the entire shared-use path, including clear zones. This usable width can be advantageous for emergency, patrol, and maintenance vehicles and allows for maneuvering around pedestrians and bicyclists who may have stopped. It also keeps the structure uncluttered of any loose gravel shoulder material.

3-605.00 ADA REQUIREMENTS

Shared-use paths must meet all applicable TDOT and ADA/PROWAG requirements to the maximum extent feasible or to the extent it is not structurally impracticable.

3-606.00 OFFSETS FROM ROADWAY

When the shared-use path is located parallel to a curbed roadway with a design speed of 45 mph or less, an eight (8)-foot minimum lateral offset from the edge of the adjacent travel lane is required including shoulder width. Additional separation beyond the minimum is preferred when feasible.

When the roadway does not have curb, the minimum buffer of eight (8) feet or the dimensions listed in *Table 3-2, Pedestrian Route Buffer Requirements by Vehicle Operating Speed* between traveled lane and the shared-use path should be maintained. Where a ditch is present, the shared-use path should be placed on the far side of the ditch. If the appropriate buffer cannot be attained, a physical barrier may be required.

When driveways are present, designing the two (2) feet grass strip is preferred. Gras strip allows the sloped driveway apron to be placed without interfering with the sidewalk or shared-use path longitudinal slope and maintains the facility at constant grade.

If the shared-use path is located within the clear zone of the roadway, consideration should be given to a crash-worthy barrier to protect the users of the path.

3-607.00 PATH CLEARANCES

A two (2)-foot wide clear zone, or lateral clearance, with maximum 6:1 fill slope on each side of the paved surface is to be provided. Sections bound by a structure, such as a pedestrian/bicycle rail, may reduce the lateral offset to one foot (see Roadway Standard Drawing MM-TS-3).

The minimum vertical clearance to obstructions shall be ten (10) feet to permit passage of maintenance and emergency vehicles and to provide adequate vertical shy distance. In locations with extreme limitations the clearance may be reduced to eight (8) feet.

3-608.00 CROSS SLOPES

TDOT's standard cross slope for shared-use paths is 1.5 percent in order to allow for construction tolerances to not exceed two (2) percent. A cross slope between one (1) percent and two (2) percent is allowable. A cross slope of less than one (1) percent would not shed water after a rain event. Graded areas adjacent to the shared-use path must allow water to drain off and away from the path.

At fill sections, the typical crown is placed on center with a maximum 1.5 percent cross slope. Cut and fill sections may use a single slope from the cut edge toward the fill section with a maximum 1.5 percent cross slope.

3-609.00 DRAINAGE

Shared-use paths in cut sections or adjacent to gravity/retaining walls need to consider additional drainage requirements to minimize ponding after a rain event. No concentrated offsite runoff over the shared-use path is allowed. TDOT Standard Drawing MM-SW-2 provides guidance for pedestrian-scale drainage structures adjacent to shared-use paths.

3-610.00 STRUCTURES ON PATHS

The proposed structure width must follow the above paved path guideline with an additional one-foot lateral clearance on both sides and proper safety rail (see Standard Drawing MM-TS-3).

3-611.00 INTERSECTIONS AND CROSSINGS DESIGN

At intersections with roadways, the path design should clearly define who has the right-of-way and provide sight distance for all users at shared-use path and roadway intersections. The common types of shared-use path/roadway at-grade intersection crossings are midblock and adjacent. Intersections with roadways require truncated domes the full width of the shared-use path. If a ramp is required, the ramp will be the width of the entire shared use path.

Midblock crossings are located between roadway intersections. When possible, locate the path crossings far enough away from intersections to minimize conflicts between the path users and turning motor vehicle traffic. It is preferable for midblock path crossings to intersect the roadway at an angle as close to perpendicular as practicable. A minimum 60-degree crossing angle is acceptable to minimize right-of-way needs.

The primary considerations when designing midblock crossings include traffic, right-of-way assignments, traffic control devices, sight distances for both path users and motor vehicle operators, refuge island use, access control, and pavement markings.

Adjacent path crossings occur where a path crosses an existing intersection of two roadways, a T intersection (including driveways), or a four-way intersection. It is desirable to integrate this type of crossing close to an intersection so that motorists and path users recognize one another as intersecting traffic. The path user faces potential conflicts with motor vehicles turning left and right from the parallel roadway and on the crossed roadway.

3-612.00 SIGHT DISTANCE TRIANGLES

See *Chapter 3-413.00* for a discussion on sight distance triangles.

3-613.00 BARRIERS AND RAILINGS

See *Chapter 3-412.00* and *Chapter 3-510.00*.

3-614.00 SIGNING AND MARKING

The public may confuse shared-use paths parallel to the roadway with sidewalks. Since bicycles are prohibited from use on sidewalks in many areas, pedestrian-scale signing should be considered to denote shared-use paths. Adequate signing is also needed where shared-use paths intersect roadways and other paths.

Pavement markings are considered optional on shared-use paths. Sections 9B and 9C of the MUTCD should be referenced for shared-use path signing and pavement marking guidance, along with TDOT Standard Drawing MM-PM-1.

Special attention should be paid to the bike route begin/end signs and intersection warning sign requirements in Standard Drawing MM-PM-1.

Additionally, curve and steep grade warning signs are recommended where applicable on shared-use paths. At a minimum, curve warning signs shall be placed in advance of curves with radii that are less than 60 feet. Grade warning signs shall be placed based on engineering judgement but should be considered when the grade exceeds five (5) percent.

Warning signs shall be placed a minimum of 50 feet in advance of locations where the curve radius is smaller than the required 60 feet. They shall also be placed two (2) feet (minimum) offset from paved surfaces. See Roadway Standard Drawing MM-TS-3). All path intersections with roadways shall have proper pavement marking and signage for both facilities. See Roadway Standard Drawing MM-PM-1. All signs shall adhere to the minimum sizes specified in the MUTCD, Section 9B.02.

SECTION 7 – TRANSIT FACILITIES

3-700.00 GENERAL

This chapter provides general site and design information for bus transit facilities. It is intended for TDOT engineering and planning staff, local transit providers, developers, and local agencies engaged in the collaborative development of transit facilities on or adjacent to state highways and state or federally funded projects. Facilities for more advanced Bus Rapid Transit (BRT), street trolleys, light rail, and heavy rail transit services and their vehicles/stations are not addressed in this chapter. Guidance for the design and operation of these facilities can be found in AASHTO's *Guide for Geometric Design of Transit Facilities on Highways and Streets.*

3-701.00 ACCOMMODATING TRANSIT USERS

Transit serves a vital transportation function by providing people with freedom of movement and access to employment, schools, community and recreational facilities, medical care, and shopping centers. Transit directly benefits those who choose this form of travel, as well as those who have no other choice or means of travel. Transit also benefits motor vehicle users by helping to reduce congestion on roadway networks. People with disabilities rely heavily on public transit.

A vital part of the success of a transit system depends on the availability of convenient and accessible facilities. Accordingly, transit user accommodations along and across roadways served by transit (and on streets that lead to transit corridors) shall provide ADA accessible pedestrian and bicycle facilities. Users also commonly access transit by personal car and taxi, as well as other modes of transit. Transit user accommodations are typically applicable:

- Within a 0.75-mile pedestrian and bicycle catchment area of an existing fixed-route transit facility (i.e., stop, station, or park-and-ride lot). A catchment area is defined by a radial distance from a transit facility per Federal Transit Administration (FTA) guidelines - this includes crossing and intersecting streets.
- Between transit stops/stations and local destinations. Midblock crosswalks should be considered at transit stops located more than 0.25 mile of a signalized or stop controlled intersection.

3-702.00 BUS STOP ACCESSIBILITY

Waiting for, boarding, and alighting from transit typically takes place in the sidewalk corridor. Transit stops should be located where boarding and alighting areas are accessible. Specific requirements for transit stops are provided in PROWAG, Section R308 *Transit Stops and Transit Shelters.*

Within the boarding areas, accessibility requirements mandate that slopes meet pedestrian access route standards: the grade parallel to the road must equal the roadway slope to the maximum extent practicable, while the cross slope (perpendicular to the road) shall be a maximum of 1.5 percent.

Each boarding and alighting area must provide a clear area five (5) feet wide (parallel to the roadway) by eight (8) feet long (perpendicular to the roadway) to accommodate the extension of assistive lifts from accessible buses and allow for wheelchairs to maneuver onto and off of the lift. This space should be clear of all obstructions. In constrained corridors with infrequent bus service and low sidewalk volumes, it may overlap other clear spaces, such as the pedestrian access route.

3-703.00 CURB EXTENSIONS / BUS BULBS

Bus bulbs are curb extensions utilized primarily for serving a bus stop. Curb extensions are typically applicable along curbed streets with on-street parking or shoulders. Curb extensions are typically six (6) feet in width. Their length should allow passengers to use the front and back doors of a bus. For reference, a standard bus is 40 feet long and an articulated bus is 60 feet long.

Besides reducing the pedestrian crossing distances, curb extensions can reduce the impact to parking compared to typical bus zones, mitigate traffic conflicts with autos for buses merging back into the traffic stream, make crossing pedestrians more visible to drivers, and create additional space for passenger queuing and amenities on the sidewalk, such as a shelter and/ or a bench.

3-704.00 BUS STOPS AND TURNOUTS

TDOT promotes public transportation services on state highways, including transit routes and stops. On limited access facilities, bus stops are only allowed at designated locations.

The bus stop is the point of contact between the passenger and the transit services. Bus stops may be located either within the travel lane, or outside the travel lane in a turnout (see *Figure 3-20, Bus Turnout Example*). The simplest bus stop is a location by the side of the road. The highest quality bus stop is an area that provides passenger amenities and protection from the weather. Bus stops are typically maintained by the transit agency. The bus boarding and alighting pad, the walkway to the shelter, and the area within the shelter must meet the requirements for ADA and TDOT Standards.

Transit agencies identify bus stop locations, including on State Routes and/or state right-of-way. Transit agencies shall ensure bus stops have adequate sight distance and universal access requirements at the proposed locations. TDOT strongly recommends that transit agencies coordinate with TDOT on new or updated bus stop locations, especially if passenger amenities and shelters are to be constructed within state right-of-way. Transit agencies shall contact the

TDOT Office of Community Transportation (OCT) for coordination and guidance purposes. The goal of this coordination and collaboration is to meet the needs of transit users and motorists while also improving pedestrian safety and connectivity. This collaborative development and planning of transit facilities is important not only for the Department, but also for the public transit agencies, to fulfill their ADA requirements. Since TDOT adopted PROWAG, all future projects using state or federal funds or TDOT right-of-way shall meet the requirements of PROWAG Section R308 "*Transit Stops and Transit Shelters*".

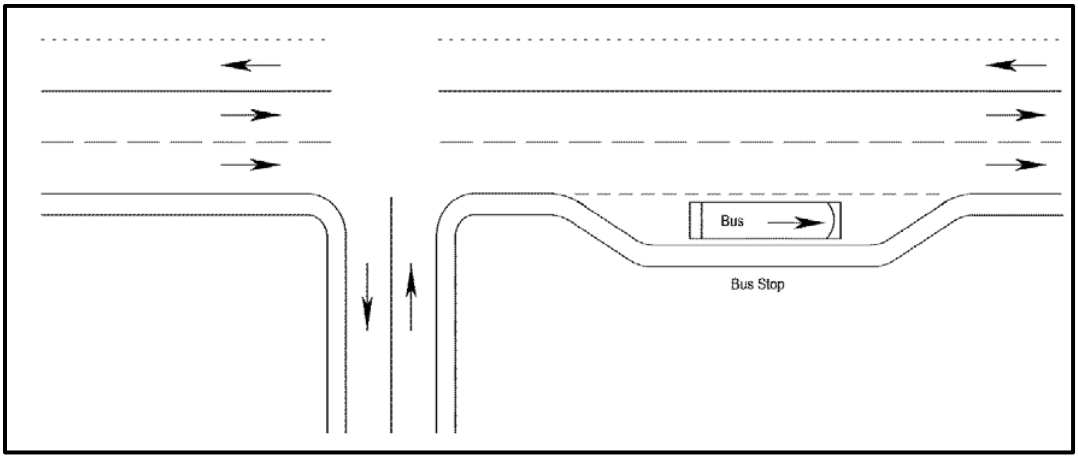

Figure 3-20: Bus Turnout Example

3-705.00 BUS STOP PLACEMENT GUIDANCE

The information in this section is offered as an example of good practice and is not intended to be binding by either the transit agency or TDOT. Placement of bus stops addresses the needs and convenience of transit providers, riders, and highway or street operations. Basic considerations include:

- The need for convenient service for patrons
- Access for people with disabilities
- Convenient passenger transfers to other intersecting bus routes or transfer points
- Connection to nearby pedestrian circulation systems
- Presence and width of sidewalks, crosswalks, and curb ramps
- Pedestrian activity through intersections
- Ability of the stop to accommodate transit dwell time and the loading/unloading of wheelchairs and bicycles
- Adequate curb space for the number of buses expected at the stop at one time
- Ease of re-entering traffic stream (if a turnout)
- Design characteristics and operational considerations of the highway or street

- Presence of on-street automobile parking and truck delivery zones
- Traffic control devices near the bus stop, such as signals or stop signs
- Volumes and turning movements of other traffic, including bicycles
- Proximity and traffic volumes of nearby driveways
- Street grade
- Proximity to rail crossings
- Accommodating transit priority equipment at signalized intersections
- Transit queue bypass at signalized intersections
- Often stops are paired on each side of a highway or street
- Proximity to intersections

Where blocks are exceptionally long or where bus patrons are concentrated well away from intersections, midblock bus stops and midblock crosswalks may be beneficial. *See Chapter 3-407.00* for more information on midblock crossings.

It is common to clearly mark the bus stop as a NO PARKING zone or as a BUS ONLY zone with signs and/or curb painting.

Typically, the preferred location for bus stops at an intersection is the near or far side of the intersection. Intersection stops provide the best pedestrian accessibility from both sides of the street and the cross streets. General considerations for locating stops near intersections include:

- Consider a near-side stop on two-lane streets where vehicles cannot pass a stopped bus
- Consider a far-side stop on streets with multiple lanes where vehicular traffic may pass uncontrolled around the bus
- On streets where vehicular traffic is controlled by a signal, the bus stop may be located either on the near side or on the far side, but the far side is preferable
- Where it is not desirable to stop the bus in a lane and a bus turnout is warranted, a far side or midblock stop is generally preferred
- When locating a bus stop in the vicinity of a driveway, consider issues related to sight distance, blocking access to development, and potential conflicts between automobiles and buses

Bus stops may be placed at midblock locations on long blocks or to serve a major transit generator. At midblock bus stops, crosswalks should be considered based on pedestrian and bicycle access patterns. If a midblock crosswalk is provided, it should be placed behind the bus stop, so passengers do not cross in front of the bus, where they are hidden from passing traffic. The sections that follow discuss these three types of bus stop locations in more detail:

- Far-side, with a stop located just past an intersection

- Near-side, with a stop located just prior to an intersection
- Midblock, with a stop located away from an intersection

3-705.01 FAR-SIDE BUS STOPS

Sight distance conditions generally favor far-side bus stops, especially at unsignalized intersections. A driver approaching a cross street on the through lanes can see any vehicles approaching from the right. With near-side stops, the view to the right may be blocked by a stopped bus. Where the intersection is signalized, the bus may block the view of one of the signal heads. Advantages of far-side bus stops include:

- Right turns can be accommodated with less conflict
- Minimum interference is caused at locations where traffic is heavier on the approach side of the intersection
- Stopped buses do not obstruct sight distance for vehicles entering or crossing from a side street
- At a signalized intersection, buses can often find a gap to enter the traffic stream, except where there are heavy turning movements onto the street with the bus route
- Waiting passengers assemble at less-crowded sections of the sidewalk away from the intersection corners
- Buses in the bus stop do not obscure traffic control devices or pedestrian movements at the intersection

Disadvantages of far-side bus stops include:

- Intersections may be blocked if other vehicles park illegally in the bus stop or if more buses than the stop can accommodate arrive at the same time
- If signal priority is not used, the bus stops at the red light and again at the far-side stop, interfering with traffic and efficient bus operations

3-705.02 NEAR-SIDE BUS STOPS

Advantages of near-side bus stops include:

- May be considered in cases where a far-side bus stop location does not provide a secure, convenient, or feasible boarding location for passengers
- Minimum interference is caused where traffic is heavier on the departure side than on the approach side of the intersection
- Less interference is caused where the cross street is a one-way street from right to left
- Passengers generally exit the bus close to the crosswalk
- There is less interference with traffic turning onto the bus route street from a side street

Disadvantages of near-side bus stops include:

- Can cause conflicts with right-turning traffic
- Buses often obscure sight distance to stop signs, traffic signals, or other control devices, as well as to pedestrians crossing in front of the bus
- Where the bus stop is too short to accommodate buses arriving at the same time, the overflow may obstruct the traffic lane
- If a queue bypass or bus lane is not used at a signalized intersection, then vehicles waiting at a red signal may block buses from accessing the bus stop, which will require the bus to wait through multiple signal cycles to enter and then depart the bus stop

3-705.03 MIDBLOCK BUS STOPS

Midblock stop areas are desirable under the following conditions: where traffic or physical street characteristics prohibit a near- or far-side stop adjacent to an intersection, or where large factories, commercial establishments, or other large bus passenger generators exist. Locate a midblock stop at the far side of a pedestrian crosswalk (if one exists), so that parked buses do not block an approaching motorist's view of pedestrians in the crosswalk.

Advantages of midblock bus stops include:

- Buses cause a minimum of interference with the sight distance of both vehicles and pedestrians
- Stops can be located adjacent to major bus passenger generators and attractors

Disadvantages of midblock bus stops include:

- Increases walking distance for passengers crossing at intersections
- Buses may or may not have difficulty reentering the flow of traffic
- Driveway access may or may not be negatively impacted

3-706.00 BUS TURNOUTS

A bus turnout is a recessed curb area located adjacent to the traffic lane. Bus turnouts are desirable only under certain conditions because of the delay created when the bus must reenter traffic. They should typically not be located on the near side of signalized intersections due to the difficulty for buses to reenter the traffic stream (queued vehicles block the turnout on the red cycle and moving traffic prevents reentry on the green cycle).

Bus turnouts have the following advantages:

- Allow traffic to proceed around the bus, reducing delay for other traffic
- Maximize vehicular capacity of high-volume vehicle mobility priority streets
- Clearly define the bus stop

- Passenger loading and unloading can be conducted in a more relaxed manner
- Reduce potential for rear-end crashes

Bus turnouts have the following disadvantages:

- Make it more difficult for buses to reenter traffic, increasing bus delay and average travel time for buses
- Difficulty of buses pulling parallel to curb, reducing accessibility
- Greater crash risk for buses pulling back into traffic than buses stopped in traffic lane
- Use additional space and might require right-of-way acquisition

Typical bus turnouts consist of a 40 to 60-foot long entrance taper, a stopping area that is 40 to 60 feet long (for a standard and articulated bus, respectively), and a 40 to 60-foot long exit taper.

SECTION 8 – VEHICLE FACILITIES SUPPORTING MULTIMODAL ACCOMMODATION

3-800.00 GENERAL

Multimodal roadway design requires consideration of all existing and planned modes in the design process. The design process often requires a flexible approach to applying conventional roadway design criteria for the vehicle traveled way in order to provide an appropriate level of accommodation for other users such as pedestrians and bicycles. This chapter addresses some of the elements of traveled way design that may require unique and creative designs.

3-801.00 VEHICLE TRAVEL LANE AND SHOULDER WIDTHS

Multimodal roadway design is often controlled or impacted by the required widths of vehicle travel lanes. *Table 3-4, Travel Lane Width Range by Context and Functional Classification* provides recommended lane width ranges for multimodal roadway design by functional classifications across a range of land use contexts. Lane width can affect the operation and safety of all modes along a roadway and should be carefully selected.

Travel Lane Widths (ft)					
Context/ Roadway	Rural	Rural (Town)	Suburban	Urban	Urban (Core)
Principal Arterial	11 to 12	11 to 12	11 to 12	10 to 12	10 to 12
Minor Arterial	11 to 12	10 to 12	10 to 12	10 to 12	10 to 12
Collector	11 to 12	10 to 12	10 to 12	10 to 12	10 to 12
Local	9 to 12	9 to 12	9 to 12	10 to 12	9 to 12

- Minimum 11-foot lanes are required for design speeds of 45 mph or greater. The values assume rural areas have design speeds of 45 mph or greater, except on local streets.
- Curbside lanes with fixed-route transit service should be 11 feet wide (min.).

Table 3-4: Travel Lane Width Range by Context and Functional Classification

Multimodal roadway design is also often influenced or impacted by the required widths of roadway shoulders where they are used. *Table 3-5, Paved Shoulder Width Range by Context and Functional Classification* provides recommended lane width ranges for multimodal roadway shoulder design by functional classifications across a range of land use contexts.

Recommended Minimum Paved Shoulder Widths (ft) for Multimodal Accommodations			
Context / Roadway	Rural & Rural (Town)	Suburban	Urban & Urban (Core)
Principal Arterial	4 to 10	4 to 10	4
Minor Arterial	4 to 10	4 to 10	4
Collector	4 to 6	4 to 6	4
Local	0 to 4	0 to 4	0 to 4

- Shoulders narrower than four (4) feet may be appropriate in constrained areas where separate pedestrian accommodation is provided and shared bicycle/motor vehicle accommodation is suitable. Examples of these conditions are where design speeds are less than 45 miles per hour and traffic volumes are relatively low (less than 4,000 vehicles per day), or where the design speed is 30 miles per hour or less.
- For shoulders four (4) to five (5) feet wide, an additional two (2)- to one (1)-foot offset (respectively) from the edge of the paved shoulder is required to vertical elements over 6 inches in height (such as guardrail).
- Five (5)-foot minimum width shoulders are recommended when the shoulder will be designated as a bicycle lane. Refer to Roadway Standard Drawing MM-TS-1 for further guidance.

Table 3-5: Paved Shoulder Width Range by Context and Functional Classification

For arterial and collector roadways, the combined width of the outside lane plus shoulder available for bicycle and motor vehicle travel is an important design element. Where there is bicyclist demand and no dedicated bicycle facility, a 14-foot outside lane/shoulder width combination will allow a motor vehicle to pass a bicyclist without needing to change lanes (on a multilane section) or swerve into the oncoming lane (on a two-lane section) and is the recommended combined width for collector and arterial streets under these conditions.

3-802.00 DESIGN VEHICLES AND CONTROL VEHICLES

The Design Vehicle influences the selection of design criteria related to turning radii such as curb-return radii and lane width. It is not always practical or desirable to choose the largest Design Vehicle that might occasionally use a roadway, because the larger turning radius negatively impacts pedestrian crossing distances, crosswalk design, speed of turning vehicles/pedestrian safety, right-of-way, etc. and may be inconsistent with the adjacent land use context and multimodal objectives for the street. In contrast, selection of a smaller Design Vehicle in the design of a facility regularly used by large vehicles will create frequent operational problems.

The Design Vehicle must be regularly accommodated without encroachment into the opposing traffic lanes. A condition that uses the Design Vehicle concept arises when large vehicles regularly turn at an intersection with high volumes of opposing traffic (such as a bus route).

The Control Vehicle is an infrequent user of a facility that must be accommodated, but encroachment into the opposing traffic lanes, multiple-point turns, or minor encroachment into the street-side is acceptable on roadways with lower speeds (35 mph and below) and lower volumes (generally 10,000 ADT and below).

The roadway should normally be designed for the largest Design Vehicle that will use the facility with considerable frequency (for example, a bus on bus routes, a semi-tractor trailer on primary freight routes), but not the largest vehicle that might occasionally be present. In urban environments, the largest frequent users of roadways are often buses (on bus routes) and package delivery trucks on non-bus routes.

3-803.00 DESIGN SPEED CONSIDERATIONS IN MULTIMODAL DESIGN

Design speed influences other design criteria such as horizontal and vertical alignment, lane width, shoulder width, grade, and stopping sight distance. The selected design speed should be a logical one with respect to the anticipated operating speed, topography, the adjacent land use, and the functional classification of the highway.

The boundary between high-speed design and low-speed design is in the range of 45 to 50 mph (design speed). On rural, high-speed roadways (50 mph design speed and above), above-minimum design criteria for specific design elements should be used, where practical. On lower speed facilities (45 mph design speed and below), use of above-minimum design criteria may encourage travel at speeds higher than the appropriate speed for the land use context.

Urban streets generally have operating speeds of 20 to 45 mph. The traditional design speed approach would propose design speeds of 30 to 60 mph. However, this may contribute to undesirably high travel speeds. As a result, a concept called target speed should be considered. Target speed is a concept that applies to urban and suburban environments; it is not applicable to high-speed rural roadways where designing a “forgiving” road for vehicles is a primary consideration.

The basis of target speed is that the current practice of creating a forgiving roadway for motor vehicles increases operating speed, creating a more dangerous street for all users including motorists, pedestrians, and bicyclists. Target speed reverses the use of operating speed in design. Instead of designing to current and sometimes undesirably high vehicle operating speeds, it promotes constraining operating speeds through design.

On roadways with existing or planned high levels of multimodal activity, the target speed concept should be considered as an element of the design process. Target speed should be set at the highest speed at which vehicles should operate on a roadway in a specific context,

consistent with the level of multimodal activity generated by adjacent land uses to provide both mobility for motor vehicles and a safer environment for pedestrians and bicyclists. The target speed is designed to become the posted speed limit.

Regardless of whether called “design speed” or “target speed”, urban roadways should have design elements that promote safer operating speeds consistent with the multimodal activity along the facility and the context of the project area.

3-804.00 ON-STREET PARKING CONSIDERATIONS

On-street parking should only be provided on low-speed streets with operating speeds of 35 mph or less. When a proposed project is to include on-street parking, parallel parking is typically recommended. Parallel parking serves as a good traffic calming tool and provides a buffer between the travel lane and the sidewalk (where a sidewalk exists). The allowance for on-street parking should be based on the function and width of the street, the adjacent land use, and traffic volume, as well as existing and anticipated traffic operations.

Most vehicles will parallel park within six (6) to 12 inches of the curb face and will occupy approximately seven (7) feet of actual street space. Therefore, the recommended minimum width of a parking lane is eight (8) feet, inclusive of the gutter pan. However, on urban collector streets within residential neighborhoods where only passenger vehicles need to be accommodated in the parking lane, seven (7)-foot wide parking lanes are acceptable. In many urban areas, a total width of 36 feet, consisting of two 11-foot travel lanes and seven (7)-foot parking lanes on each side, is frequently used.

In urban areas, central business districts, and commercial areas where significant pedestrian crossings are likely to occur, the design of the parking lane/intersection relationship must be considered. When the parking lane is carried through the intersection, motorists may utilize the parking lane as an additional lane for right turn movements. Such movements may cause operational inefficiencies and turning vehicles may mount the curb and strike such roadside elements as traffic signals, utility poles, or luminaire supports. One method to address this issue is to end the parking lane at least 20 feet in advance of the intersection and create a curb extension. Curb extensions also shorten the crossing width for pedestrians and improve safety by making the pedestrian more visible to the motorist. See *Chapter 3-408.00* for additional information related to curb extensions.

3-805.00 INTERSECTION CURB RADIUS CONSIDERATIONS

The curb radii used at both signalized and unsignalized intersections should be selected by the Designer based on safety, operations, and convenience for pedestrians, bicyclists, and motor vehicles. Curb radii should be appropriate for the largest Design Vehicle that regularly

makes a specific turning movement. Due to constraints of adjacent development and pedestrian/bicyclist considerations in urban areas, it is usually not practical to provide the full curb radii that would be necessary for the occasional Control Vehicle.

Larger intersection curb radii (over 25 feet) have disadvantages for pedestrians and bicyclists because they can increase pedestrian crossing distance and the speeds of turning vehicles, creating increased safety risks. Large radii also move pedestrians out of the driver's line of sight and make it more difficult for pedestrians to see approaching vehicles, and vice-versa.

Smaller curb radii allow for shorter pedestrian and bicyclist crossing distances, which reduces exposure to moving vehicles, decreases walk time, and increases signal efficiency. The trade-off is the infrequent Control Vehicle may need to encroach into the opposing traffic lanes, make multiple-point turns, have minor encroachment into the street-side to make the turn, or take a different route.

The Designer must ensure that infrastructure such as signal poles, signal cabinets, light poles, street furniture, etc. does not conflict with the Control Vehicle if areas outside the designated turn/travel lanes will be utilized. Additionally, on-street parking and bicycle lanes shall be considered when designing a curb radius, as they will increase a vehicle's effective turning radius, allowing the curb radius to be smaller than it would normally be.

At intersections of roadways where trucks make frequent right turns, a raised channelization island between the through lanes and the right-turn lane may be a better alternative than an overly large corner radius. If designed correctly, a raised island can achieve the following:

- Allow pedestrians to cross fewer lanes at a time
- Allow motorists and pedestrians to judge the right turn/pedestrian conflict separately
- Reduce pedestrian crossing distance, which can improve signal timing for all users
- Balance vehicle capacity and truck turning needs with pedestrian safety
- Provide an opportunity for landscape and hardscape enhancement

The following design practices for right-turn lane channelization islands should be used to provide improved safety and convenience for pedestrians, bicyclists, and motorists:

- The provision of a channelized right-turn lane is appropriate on signalized approaches where right-turning volumes are high or large vehicles frequently turn and conflicting pedestrian volumes are low
- Provide a yield sign for the channelized right-turn lane unless a continuous receiving lane is provided
- Tighter angles are preferred
- Provide at least a 60-degree angle between vehicle flows, which reduces turning speeds and improves the yielding driver's visibility of pedestrians and vehicles

- Place the crosswalk across the right-turn lane about one car length back from where drivers yield to traffic on the other street, allowing the yielding driver to respond to a potential pedestrian conflict first, independently of the vehicle conflict, and then move forward, with no more pedestrian conflict
- Provide raised, ADA compliant, islands for pedestrian refuge
- Curbed channelization islands must include curb ramps or at-grade cut-through paths for pedestrians. At-grade cut-through paths should be at least five (5) feet wide to provide room for two users of wheelchairs to pass in opposite directions. Cut-through paths should be designed to allow for water to drain from the island area to the travel lanes. Detectable warnings are required at the transition between cut-through paths and vehicular travel ways (assuming the island is at least six (6) feet wide)
- Unless the turning radii of trucks or buses need to be accommodated, the pavement of the channelized right-turn lane should be no wider than 16 feet; and to slow vehicles, the width of the travel lane should be restricted to 12 feet by marking the edge lines and using cross-hatching based on engineering judgment
- Signalization of the channelized right-turn lane can reduce vehicle-pedestrian conflicts and may be appropriate where:
    - There are multiple right-turn lanes
    - Crash data show a high frequency of vehicle-pedestrian crashes, or
    - There are other concerns such as restricted sight distance or vehicle speeds are high on the turning roadway

Figure 3-21, Preferred Right-Turn Island Design, shows the preferred channelized right-turn island design. When creating this design, it is often necessary to allow large trucks to turn into multiple receiving lanes or the opposing lane. This design is therefore often not practical for right-turn lanes onto roads with only one through lane.

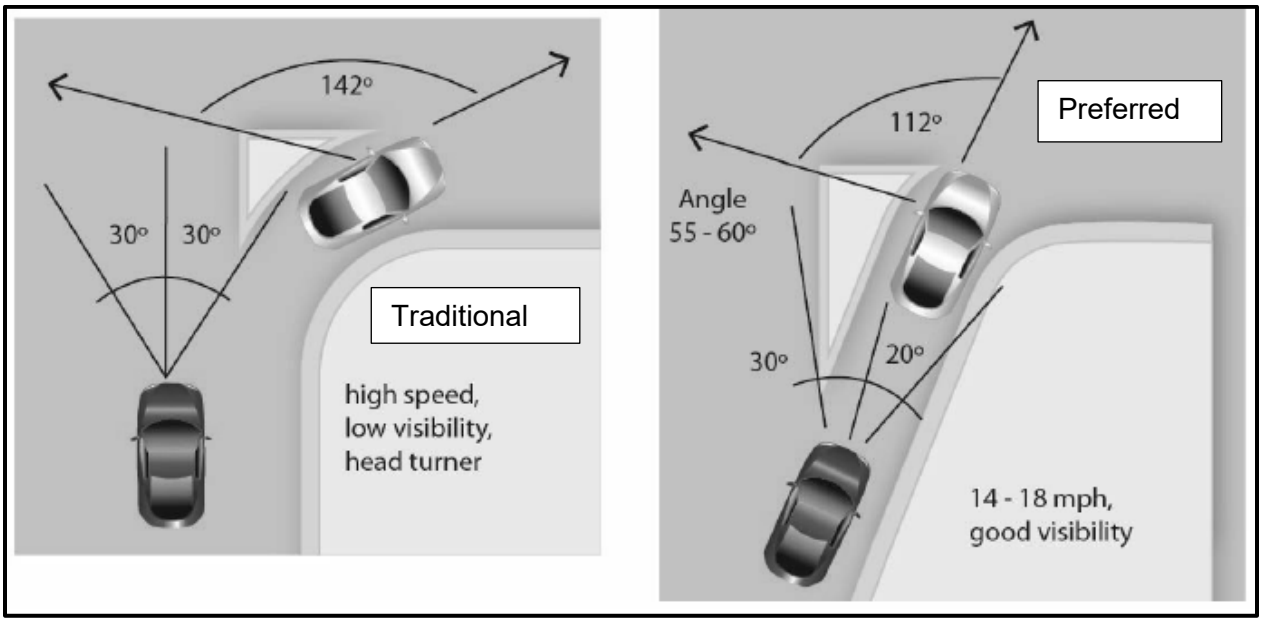

Figure 3-21: Preferred Right-Turn Island Design

3-806.00 CROSSWALKS AT MIDBLOCK LOCATIONS

See *Chapter 3-407.00.*

3-807.00 ROAD RECONFIGURATION AND ROAD DIETS

See *Road Diet Guidance Manual* for more information.

SECTION 9 – ADDITIONAL CONSIDERATIONS

3-900.00 GENERAL

The following information includes several roadway design considerations that a Designer may need to take into consideration when designing multimodal roadway facilities along a state roadway.

3-901.00 SAFETY CONSIDERATIONS FOR ALL USERS

Right-of-way and design constraints often pose challenges when retrofitting a multimodal design onto an existing street cross section. For low-volume and low-speed streets, many of the design modifications (narrow lanes, reduced lanes, adding sidewalks/walkways, adding bicycle lanes, etc.) are easy to make, requiring few trade-offs. Retrofitting multimodal street concepts on higher-volume or higher-speed streets is more challenging.

Speed is a primary consideration when evaluating potential adverse impacts of lane width on safety. On high-speed, rural two-lane highways, an increased risk of cross-centerline head-on or cross-centerline sideswipe crashes are a concern because drivers may have more difficulty staying within the travel lane. On any high-speed roadway, the primary safety concerns with reductions in lane width are crash types related to roadway departure.

In a low-speed urban environment, the effects of reduced lane width are different. On these facilities, the risk of roadway departure crashes is less. The design objective is often how to best distribute limited cross-sectional width to maximize safety for a wide variety of street users. Narrower lane widths may be chosen to manage or reduce speed and shorten crossing distances for pedestrians. Lane widths may be adjusted to incorporate other cross-sectional elements, such as medians for access control, bicycle lanes, on-street parking, transit stops, and landscaping.

3-902.00 SPEED CONSIDERATIONS IN MULTIMODAL DESIGN

All roadway users, particularly pedestrians and bicyclists, are safer when motorists' speeds are lower. The design of a roadway should be consistent with the level of multimodal activity generated by adjacent land uses to provide both mobility and a safer environment for all users.

On higher speed roads, the speed differential between vehicles and bicyclists or pedestrians should be a major factor in determining multimodal facility selection along a corridor. The likelihood of being killed or seriously injured increases exponentially with an increase in speed differential between motorized and non-motorized users, and between cyclists and pedestrians. For example, it is more difficult for pedestrians to judge gaps between vehicles when crossing a road, as well as for a motorist to judge the distance required to pass a cyclist.

Along corridors with large speed differentials between users, facilities separated by buffers or other physical elements for each user are recommended. Aside from increased safety, there is a direct correlation between speed differential and user comfort for all modes.

3-903.00 PEDESTRIAN SIGNAL CONSIDERATIONS IN MULTIMODAL DESIGN

The MUTCD, ITE's *Traffic Engineering Handbook*, and TDOT's *Traffic Design Manual* provide guidance for the warrants, design, and operation of traffic signals. Traffic signal design is complex and specific to the roadway corridor, as well as to each project intersection. However, supplemental recommendations for the Roadway Designer and operator to consider in multimodal environments are provided below.

Pedestrian pushbuttons, marked crosswalks, and pedestrian signals should be provided at all signalized locations with existing sidewalks, and within all suburban or urban land use contexts. Pedestrian pushbuttons and signals shall be used where there are existing pedestrian circulation paths at signalized intersections. On state or federally funded new signal installations, or where an existing signal is modified, the pedestrian pushbuttons and signals shall have audible guidance to meet the accessibility requirements in the United States Access Board's *Proposed Accessibility Guidelines for Pedestrian Facilities in the Public Right-of-Way* (PROWAG). For additional information on the installation of APS, see Chapter 3-410.00.

Signal cycle lengths of up to 120 seconds are typically acceptable to optimize vehicular traffic movements. The typical maximum cycle length is 150 seconds. However, short cycle lengths of 60–90 seconds are more appropriate for urban areas with high pedestrian and/or bicyclist activity. Expecting pedestrians or bicyclists to wait 120 seconds or more before receiving a walk signal is not preferred. When developing a signal cycle plan, the Designer should weigh the effects on all users, vehicular, pedestrian, and cyclists.

Concerning pedestrian signals, many municipalities in Tennessee place their signals under flash operation late at night and into the early morning. This practice should not be done, especially on multilane routes, if pedestrian activity is expected late at night. Such areas could include where late night events occur. Traffic controllers cannot accept a pedestrian push button call when in flash operation.

When a project's limits begin or end at an intersection, all approaches to the intersection must be upgraded with similar multimodal features such that pedestrians and cyclists can safely traverse the intersection. If curb ramps are installed, they must be installed in all quadrants of an intersection with curb. If vehicular lanes are modified, signal heads will typically need to be replaced or shifted, along with possible modifications to the signal cabinet.

3-904.00 MULTIMODAL ACCOMMODATIONS IN RESURFACING PROJECTS

TDOT's *Roadway Design Guidelines* specify certain pedestrian and bicyclist accommodations to be incorporated into resurfacing projects. Curb ramps shall be

installed/retrofitted where they are missing or are not compliant with TDOT Standards and ADA/PROWAG guidance, to the maximum extent feasible.

Additionally, TDOT promotes that when the existing shoulders are adequate, resurfacing projects provide a good opportunity to incorporate pavement markings for bicycle lanes. Also, where the existing catch basin grates adjacent to the curb are parallel-type grates, TDOT will install bicycle-friendly perpendicular-type catch basin grates.

3-905.00 MAINTENANCE CONSIDERATIONS

As an element of the design process, the Designer should consult with all local agencies to determine partnering opportunities for multimodal facility maintenance beyond routine activities of the Department. The purpose of this consultation would be to clearly understand which agency will be responsible for maintaining specific elements of the pedestrian, bicycle, and transit facilities within the design project.

Pedestrian and bicycle facilities, including shared-use paths, installed along State Routes are typically maintained by the state in unincorporated areas and by the local agency in incorporated areas. Transit access facilities, such as bus stops, are typically maintained by the local transit agency responsible for transit operations.

In incorporated areas, some local agencies may be better equipped to maintain these facilities than others. It may be advantageous to discuss the maintenance capabilities of the local agency and develop a special maintenance agreement. It is important to set elements and expectations of the required maintenance activity for the multimodal facility type and discuss the anticipated methods for maintaining the facility. Maintenance discussions should typically consider the following activities:

- Sweeping
- Pavement repair and rehabilitation
- Signing
- Pavement markings
- Special signalization
- Snow removal
- Lighting

3-906.00 PAVEMENT CONSIDERATIONS IN MULTIMODAL DESIGN

Different surface materials, patterns, and textures are useful tools to better establish zones for users and align with the context of a corridor. Along with ADA requirements, the following requirements must also be met when entertaining their use.

Surfaces should be smooth, free of rough textures, openings, and gaps. Expansion and contraction joints are allowed but must not create a level change of more than 0.25 inch.

Pedestrian zone surfaces should be as visually uniform as possible, as people with even minor levels of visual impairment may mistake visual contrast in the pathway with changes in grade. Along these lines, Designers are required to have clearly defined sidewalk edges to provide navigational cues for people with visual impairments.

Permeable pavement types are allowed in parking lots, but special considerations for maintenance should be included in any design to ensure that the riding or walking surface continues to function free from debris that might cause loose material, water, or ice to eventually collect on the surface. The walking surface of crosswalks will be smooth asphalt or smooth concrete with longitudinal markings. See *Chapter 3-405.00* for guidance on using patterns on the edges.

3-907.00 WORK ZONE MULTIMODAL MOBILITY REQUIREMENTS

When existing pedestrian, bicycle, and transit facilities are disrupted, closed, or relocated in a temporary traffic control zone, the temporary facilities should be easily detectable and include accessibility features consistent with the features present in the existing facilities.

An alternative route should be provided whenever the pedestrian or bicycle route is blocked. Warning signs should be provided when an alternative circulation path is provided, or a barricade is constructed. Signage must be compliant with the current edition of the MUTCD, Part 6 for Temporary Traffic Control.

Design of temporary facilities in the public right-of-way should typically conform to the requirements for permanent facilities where feasible. The Work Zone Design Manual should be utilized to provide more information.

3-908.00 DESIGN WAIVER FORM

Designing a multimodal facility/roadway is not a one-size-fits-all approach. It requires an analysis of various site conditions to determine appropriate treatments and solutions. Using standard design elements, criteria, and dimensions may not be possible in these contexts that are often in constrained right-of-way. Applying flexibility in the geometric design process is often justified. Despite the range of flexibility that exists with respect to the elements of design, there are situations in which the accepted criteria are not applicable to the project circumstances or could not reasonably be met. For such instances, when it is appropriate, the design waiver form allows for the use of criteria other than the normally accepted values.

TDOT's *Design Waiver Form* should be used whenever the Designer recommends the use of design elements, criteria or dimensions not in conformance with the standards outlined in the *Roadway Design Guidelines and/or TDOT Standard Drawings*. TDOT will review the design waiver request more favorably if guidance from another source is provided. Other sources could include, but are not limited to, AASHTO, ADA, PROWAG, DOJ, NACTO, FHWA, NCHRP, or design guidance from other states. See *Chapter 2-201.00* for additional guidance.